YOULI ELECTRIC

2026 / ENGLISH

SWITCHGEAR / 01

Switchgear & control systems.

Low and medium voltage distribution equipment



LOW VOLTAGE / MNS



MEDIUM VOLTAGE / KYN28A-12

0.4-40.5 kV

PRODUCT RANGE

Technical product catalogue

Configured for your project

JIANGSU YOULI ELECTRIC CO., LTD.

Yangzhong, Jiangsu, China

youli-electric-global.vercel.app

Enhanced catalogue photographs. Confirm product details against approved drawings.

REFERENCE

CONTENTS

Product families and navigation

LOW VOLTAGE SYSTEMS

Series	Product family	Page
MNS	Low voltage withdrawable switchgear	5
GCS	Low voltage withdrawable switchgear	7
GCK	Low voltage withdrawable switchgear	9
GGD	AC low voltage fixed switchboard	11
GZG	DC power supply panels	13
TDR	Capacitor compensation assemblies	15
JP	Outdoor distribution and compensation cabinet	17
ATS	Automatic transfer switch panels	19
YL-XF and YL-FPY	Fire protection electrical control panels	20
GXL	Power distribution boxes	22
JXF	Distribution boxes	23
JL	Electricity metering boxes	24
PZ30 family	Modular distribution and metering enclosures	25
JXF cable branch box	Outdoor cable distribution equipment	28

MEDIUM VOLTAGE SYSTEMS

Series	Product family	Page
KYN28A-12	Indoor metal-clad withdrawable switchgear	30
KYN28A-24	Metal-clad withdrawable switchgear	32
KYN61Y-40.5	Metal-clad withdrawable switchgear	34
KYN1-10	Indoor AC metal-clad withdrawable switchgear	36
HXGN-10	Fixed metal-enclosed ring main switchgear	38
XGN15-12 F and F R	Metal-enclosed ring main switchgear	40
HXGN15-12	SF6 ring main switchgear	42
XGN2-10	Fixed AC metal-enclosed switchgear	44
YB	Prefabricated substations	46

REFERENCE

Series	Product family	Page
Standards guide	GB and IEC references	3
Ordering information	Technical data and manufacturer contact	48
Technical review notes	Items for manufacturer confirmation	49

All dimensions are in millimetres unless otherwise indicated. AC values are rms unless marked as peak. A dash means the source provides no value. Optional ratings must be confirmed against the selected design.

REFERENCE

Standards guide

GB and IEC references for international projects

A standard reference identifies a technical basis; it is not a certificate. The historical standards cited in the source are retained on product pages. The references below are for project specification and require confirmation against the actual design, verification records and destination requirements.

Product scope	GB reference	IEC reference
Power switchgear assemblies	GB/T 7251.1-2023 GB/T 7251.2-2023	IEC 61439-1 IEC 61439-2:2020
Metal-enclosed AC switchgear	GB/T 3906-2020	IEC 62271-200:2021 with AMD1:2024 where specified
Prefabricated HV/LV substations	GB/T 17467-2020	IEC 62271-202:2022
Enclosure protection classification	Confirm applicable GB/T 4208 edition	IEC 60529

USE IN TENDERS AND PURCHASE ORDERS

Select the product-specific standards and editions in the technical agreement. Obtain the applicable type or design verification reports, routine test records and component schedules. Confirm ambient temperature, altitude, installation and protection requirements for each project.

The source includes CCC and type-test statements without supporting certificates or reports. They are treated as historical manufacturer statements and are not reproduced as independently verified approvals.

PUBLIC REFERENCE SOURCES

IEC 61439-2: https://webstore.iec.ch/en/publication/30043

IEC 62271-200: https://webstore.iec.ch/en/publication/63466

IEC 62271-202: https://webstore.iec.ch/en/publication/66264

GB/T 7251.2 replacement notice: https://www.cqc.com.cn/www/col68/596478.html

GB/T 3906 and GB/T 17467 notice: https://www.cqc.com.cn/www/col68/557504.html

01

LOW VOLTAGE SYSTEMS

Distribution, motor control, compensation and final circuits



PRODUCT DATA / CONFIGURATION / INSTALLATION

Detailed electrical ratings, service conditions and dimensional data are provided on the following pages. Confirm the selected configuration against the approved project documents.

LOW VOLTAGE SYSTEMS / 01

MNS

Low voltage withdrawable switchgear

01



01 / MNS

380 / 660 V	Up to 5500 A	IP30 / 40 / 54
OPERATING VOLTAGE	MAIN BUSBAR	PROTECTION

OVERVIEW

A factory-built modular low voltage assembly for 50–60 Hz AC systems up to 660 V. It distributes and converts electrical power and controls electrical loads in generation, transmission and distribution installations.

TECHNICAL DATA

Characteristic	Specification
Rated insulation voltage	660 V
Main busbar short-time withstand	100 kA for 1 s
Main busbar peak withstand	250 kA
Vertical distribution busbar current	1000 A
Vertical busbar peak withstand	90 kA standard; 130 kA reinforced

Standards cited in the source: IEC 439; VDE 660 Part 5; GB 7251.1-1997; IEC 529; DIN 40050.

Source reference: Chinese catalogue pp. 1–2.

LOW VOLTAGE SYSTEMS / TECHNICAL DATA

MNS

Compartments and modular construction

OPERATING CONDITIONS

Indoor service at −5 to +40 °C; 24-hour mean up to +35 °C. Altitude up to 2000 m. Relative humidity up to 50% at +40 °C or 90% at +20 °C, with condensation considered. Install in a clean, non-corrosive location free from severe vibration. Special conditions require agreement with the manufacturer.

Transport and storage temperature: −25 to +55 °C; up to +70 °C for no more than 24 hours. Offshore drilling platforms and nuclear power stations require a separate technical agreement. IP54 execution requires consultation.

POWER CENTRE CABINET DIMENSIONS

Height	Width	Depth	Equipment depth	Cable depth	Application
2200	400	1000	800	200	Busbar transition
2200	400	1000	800	200	F ≤ 1250–2000; ME630–1600
2200	600	1000	800	200	F ≤ 2500
2200	800	1000	800	200	F ≤ 3200; ME2000–2500
2200	1000	1000	800	200	F ≤ 4000; ME3000
2200	1200	1000	800	200	ME4000

MOTOR CONTROL CENTRE CABINETS AND DRAWERS

MCC cabinet height 2200; overall width 1000, comprising a 600 equipment section and 400 cable section. Single-sided depth 600; double-sided depth 1000. Equipment and cable depths are 400 and 200 respectively in the source dimensional scheme.

Drawer size	Height × width × depth
8E/4	200 × 150 × 400
8E/2	200 × 150 × 400 as printed; verify
8E	200 × 600 × 400
16E	400 × 600 × 400
24E	600 × 600 × 400

Provide the main single-line diagram, control schematic, component ratings and quantities, cabinet arrangement and room layout when ordering. Busbar, apparatus and cable compartments are segregated.

LOW VOLTAGE SYSTEMS / 02

GCS

Low voltage withdrawable switchgear

02



02 / GCS

380 / 660 V	Up to 4000 A	50 / 60 Hz
OPERATING VOLTAGE	MAIN BUSBAR	FREQUENCY

OVERVIEW

Low voltage assemblies for power plants, petrochemical plants, metallurgy, textile facilities and high-rise buildings. GCS supports power distribution, central motor control and reactive power compensation, including applications requiring computer interfaces.

TECHNICAL DATA

Characteristic	Specification
Rated insulation voltage	AC 660 V; 1000 V option as printed
Auxiliary circuit voltage	AC 380 / 220 / 24 V; DC 220 / 110 V
Vertical busbar current	1000 A
Peak withstand current	105 kA; 176 kA option
Short-time withstand current	50 kA; 80 kA option
Drawer circuit current	Up to 400 A

Standards cited in the source: GB 7251; JB/T 9661; IEC 60439-1.

Source reference: Chinese catalogue pp. 3–4.

LOW VOLTAGE SYSTEMS / TECHNICAL DATA

GCS

Functional units and installation dimensions

Drawer height is based on a 160 mm module, with ½, 1, 1½, 2 and 3-unit variants. Segregated functional units limit the spread of faults. Horizontal busbars provide thermal and dynamic strength; the source identifies an 80 kA / 176 kA configuration.

- Up to 22 circuits in one MCC cabinet. Cable connections are made in a dedicated compartment with top or bottom access.
- Current-limiting reactors may be selected to limit fault current and stabilise busbar voltage.
- Secondary connectors: 32 pairs for drawers of one unit or larger; 20 pairs for half-unit drawers.

STANDARD CABINET SIZES

Height	Width	Available depths
2200	400	800 / 1000
2200	600	800 / 1000
2200	800	600 / 800 / 1000
2200	1000	600 / 800 / 1000

INSTALLATION DIMENSIONS

Cabinet code	A	B	C	D	E	F × G
TG1010-2	1000	1000	850	956	60	400 × 400
TG0810-2	800	1000	650	956	160	200 × 400
TG1008-2	1000	800	850	756	60	400 × 400
TG0808-2	800	800	650	756	160	200 × 400
TG1006-1	1000	600	850	556	60	400 × 350
TG0806-1	800	600	650	556	160	200 × 350

Full cabinet code prefix: GCS-. Incomer / coupler variants: TG1010-4 (A/B/C/D 1000/1000/850/956); TG0810-4 (800/1000/650/956); TG0808-4 (800/800/650/756); TG0608-4 (600/800/450/756). Confirm the installation drawing before manufacture.

LOW VOLTAGE SYSTEMS / 03

GCK

Low voltage withdrawable switchgear

03



03 / GCK

380 / 660 V	630–3150 A	IP40
OPERATING VOLTAGE	HORIZONTAL BUSBAR	PROTECTION

OVERVIEW

GCK combines power centre and motor control centre cabinets for 50 Hz AC distribution systems in power plants, substations and industrial facilities. It distributes power and controls motors and lighting loads.

CONSTRUCTION

- Bolted profiled-steel frame with three-dimensional locating plates avoids welding distortion. Mounting holes follow a 20 mm module.
- Internal structural parts are galvanised. External parts are pickled, phosphated and electrostatically coated with epoxy powder.
- PC incomers have a top horizontal busbar zone and a circuit-breaker compartment beneath. Source options include ME / DW45 and ABB F-series or intelligent circuit breakers.

Standards cited in the source: IEC 439; GB 7251.1-1997.

Source reference: Chinese catalogue pp. 5–6.

LOW VOLTAGE SYSTEMS / TECHNICAL DATA

GCK

Electrical data and installation

Characteristic	Specification
Frequency	50 Hz
Rated insulation voltage	660 V
Vertical busbar current	630 A
Short-time withstand current	Horizontal: 80 kA / 1 s; vertical: 50 kA / 1 s
Peak withstand current	Horizontal: 176 kA; vertical: 110 kA
Main / auxiliary plug connector rating	200–400 A / 10 A
Power-frequency withstand, 1 min	2500 V
Maximum controlled motor output	155 kW
Control modes	Local, remote and automatic

INSTALLATION FOOTPRINTS

Cabinet A	Cabinet B	Hole spacing a	Hole spacing b
800	500	685	385
800	800	685	685
600	1000	485	885
800	1000	685	885
1000	600	885	485
1000	800	885	685
1000	1000	885	885

The source defines an 1800 mm functional-unit zone. Four mounting holes are Ø14.5. Installation inclination must not exceed 5°. Transport and storage: −25 to +55 °C, or up to +70 °C for no more than 24 hours. Verify overall cabinet height and the wall-mounted or freestanding MCC arrangement against the approved drawing.

LOW VOLTAGE SYSTEMS / 04

GGD

AC low voltage fixed switchboard

04



04 / GGD

380 V AC	Up to 3150 A	50 Hz
OPERATING VOLTAGE	RATED CURRENT	FREQUENCY

OVERVIEW

A fixed switchboard for power conversion, distribution and control of power and lighting loads in power plants, substations and industrial installations. The welded and assembled 8MF cold-formed steel frame uses 20 mm modular mounting holes.

SERIES RATINGS

Type	Current options A	Breaking kA	1 s withstand kA	Peak kA
GGD1	1000 / 600 (630) / 400	15	15	30
GGD2	1500 (1600) / 1250 / 1000	30	30	63
GGD3	3150 / 2500 / 2000	50	50	105

The source lists 129 main-circuit schemes with 298 specifications: GGD1 has 49 / 123; GGD2 has 53 / 107; GGD3 has 27 / 68. Auxiliary functions and control-voltage variants are additional.

Standards cited in the source: IEC 439; GB 7251.

Source reference: Chinese catalogue pp. 7–8.

LOW VOLTAGE SYSTEMS / TECHNICAL DATA

GGD

Service conditions and cabinet arrangement

OPERATING CONDITIONS

Indoor service at −5 to +40 °C; 24-hour mean up to +35 °C. Altitude up to 2000 m. Relative humidity up to 50% at +40 °C or 90% at +20 °C, with condensation considered. Install in a clean, non-corrosive location free from severe vibration. Special conditions require agreement with the manufacturer.

Install vertically with no more than 5° inclination. The installation must be free of severe shock, vibration and conductive dust.

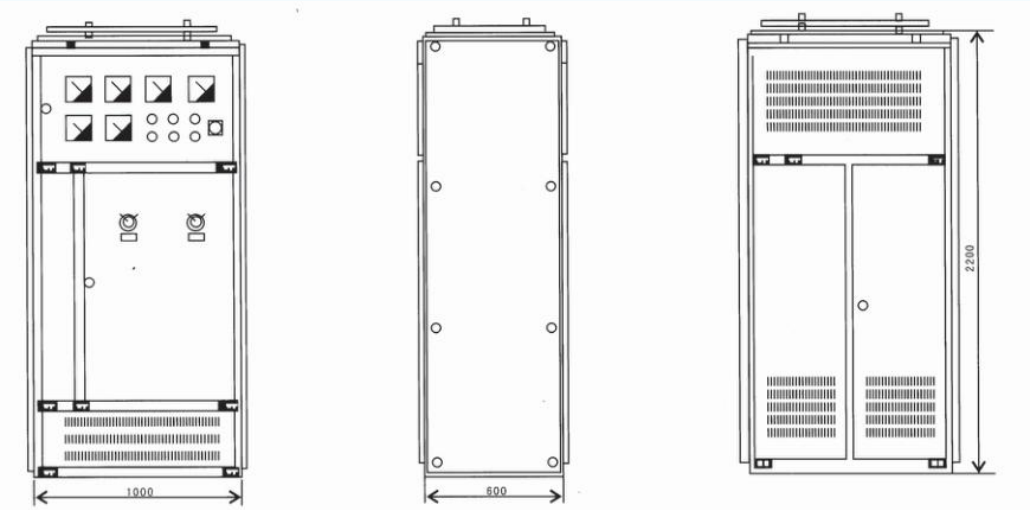

Front, side and rear cabinet views from the source catalogue.

INSTALLATION AND ORDERING

The source drawing shows a nominal 2200 mm cabinet height. Cabinet widths include 600, 800, 1000 and 1200 mm, with several depth and fixing arrangements. Confirm model-specific dimensions and fixing-hole positions before civil work.

- State the full model, including the main and auxiliary circuit scheme numbers.
- Provide the main-circuit arrangement, auxiliary schematic and cabinet component list.
- Specify all conditions outside the normal service limits.

LOW VOLTAGE SYSTEMS / 05

GZG

DC power supply panels

05



05 / GZG

110 / 220 V DC	5–200 A	IP30
OUTPUT VOLTAGE	CONTROL BUS	PROTECTION

OVERVIEW

DC supply panels for breaker closing and tripping, battery charging, protection, instrumentation, control and emergency lighting. The source describes GZG2.x and GZG3.x high-frequency switching DC systems.

Characteristic	Specification
Input	Dual AC 380 V ±15%, 50 Hz, three-phase four-wire
Closing bus output	5–3000 A
Maintenance-free lead-acid battery	10–3000 Ah
Voltage / current regulation accuracy	±0.5% / ±0.5%
Ripple coefficient	≤0.5%
Efficiency / power factor	>90% / >0.92
Noise / dielectric withstand	<50 dB / 2000 V for 1 min
Earth resistance	<0.1 Ω
Standard dimensions W × D × H	800 × 600 × 2360 or 800 × 600 × 2260

Standards cited in the source: DL/T 459-2000; JB/T 8456.

Source reference: Chinese catalogue p. 9.

LOW VOLTAGE SYSTEMS / TECHNICAL DATA

GZG and TDR

DC service conditions and reactive power compensation

GZG SERVICE AND CONFIGURATION

Ambient temperature −10 to +45 °C; maximum daily temperature change below 35 °C. Relative humidity below 50% above +40 °C, with higher humidity permitted at lower temperature. Altitude up to 3000 m; seismic intensity below 8 degrees; vertical inclination below 5°; pollution degree below 3. The location must be ventilated and free of conductive particles, explosive hazards, serious mould and corrosive gases.

The standard output arrangement has five control-bus and five closing-bus circuits. The front has a glazed door; the main panel has a top-mounted axial fan. Other output circuits and dimensions are available subject to agreement.

TDR CAPACITOR COMPENSATION PRINCIPLE

Inductive loads require reactive power and cause current to lag voltage. Installing capacitors near these loads reduces reactive power transmission, total current and voltage drop, improving power factor and reducing losses.

- Power factor correction can reduce distribution losses; the source cites typical factory wiring losses of approximately 2–3% before correction. Actual savings depend on the network and load.
- Reduced current may lower the thermal loading of transformers, switching equipment and conductors. The source’s service-life illustration is not a product lifetime guarantee.
- Control and monitoring help meet the utility’s reactive power requirements. Charges or penalties depend on the applicable tariff.

Applications include low voltage distribution and motor control centres in power plants, substations, petrochemical plants, industrial facilities and high-rise buildings.

LOW VOLTAGE SYSTEMS / 06

TDR

Capacitor compensation assemblies

06



06 / TDR

380 / 220 V AC	90–400 kvar	1–12
SYSTEM VOLTAGE	COMPENSATION	CONTROL STAGES

OVERVIEW

Reactive power compensation assemblies with contactor, hybrid-switch or thyristor switching. A reactor option is identified by the model suffix. Final equipment selection depends on the load profile, harmonic levels and target power factor.

TECHNICAL DATA

Characteristic	Specification
Frequency	50 Hz
Compensation capacities	90 / 120 / 150 / 180 / 210 / 240 / 270 / 300 / 330 / 360 / 400 kvar
Adjustable response time	0.1–30 s
Measured voltage / current	100–500 V / 0–6000 A
Power factor measurement	0.200 lagging to 0.200 leading
Active / reactive power display	0–6553 kW / 0–6553 kvar
Voltage / current total harmonic distortion	0.0–100.00%

Standards cited in the source: IEC 439-1; GB 7251; GB/T 15576-2008.

Source reference: Chinese catalogue pp. 10–11.

LOW VOLTAGE SYSTEMS / TECHNICAL DATA

TDR and JP

Compensation methods and service requirements

TDR INSTALLATION CONDITIONS

Indoor service at −5 to +40 °C; 24-hour mean up to +35 °C. Altitude up to 2000 m. Relative humidity up to 50% at +40 °C or 90% at +20 °C, with condensation considered. Install in a clean, non-corrosive location free from severe vibration. Special conditions require agreement with the manufacturer.

Install with no more than 5° inclination and keep the cabinet line level. The source also cites GBJ 232-82 for installation. Derating or a special design is required outside the stated environmental limits.

SWITCHING METHODS

- Contactor switching: manual single-step, timed switching or automatic switching controlled by reactive power demand.
- Dynamic thyristor switching: antiparallel power modules with isolation, triggering, synchronisation, protection and drive circuits; designed for rapid, quiet switching.
- Hybrid switching: thyristors switch near the zero crossing; a magnetic latching relay carries the steady-state current to reduce losses.
- Harmonic mitigation: select series reactors, AC filters, static reactive compensation or active filters following a network assessment. The source lists steelworks, ports, cement works and coal mines as applications.

JP OPERATING LOGIC

JP combines distribution, compensation and metering. Compensation may use cyclic, coded or fuzzy-logic automatic switching based on reactive power or reactive current. Typical installations use 2–5 capacitor stages and two feeders, each configured at 80–100% of transformer capacity, subject to the selected design.

The source describes overvoltage, overload, undervoltage, undercurrent, short-circuit, phase-loss and zero-sequence limit protection. After a power interruption, automatic operation resumes with a 10 s delay. A power factor above 0.95 is a source performance statement dependent on the application.

LOW VOLTAGE SYSTEMS / 07

JP

Outdoor distribution and compensation cabinet

07



07 / JP

400 V	50 Hz	≤20 ms
RATED VOLTAGE	FREQUENCY	FASTEST RESPONSE

OVERVIEW

Outdoor low voltage cabinets for urban and rural distribution networks, industrial premises, street lighting and residential developments. Functions include distribution, control, protection, reactive power compensation and metering. Residual current protection is optional.

TECHNICAL DATA

Characteristic	Specification
Application voltage in source overview	380 V; 0.4 kV class
Transformer ratings	10 / 20 / 30 / 50 / 63 / 80 / 100 / 125 / 160 / 200 / 250 / 315 / 400 / 500 / 630 kVA
Ambient temperature	−40 to +55 °C
Relative humidity	≤90% at +20 to +25 °C
Altitude / installation inclination	≤3000 m / ≤5°
Enclosure material	Cold-rolled steel or brushed stainless steel, ≥1.5 mm

Standards cited in the source: GB 7251.1-2005; GB/T 15576-2008. CCC stated in source; certificate not supplied.

Source reference: Chinese catalogue pp. 12–13.

LOW VOLTAGE SYSTEMS / TECHNICAL DATA

JP

Functional schemes and enclosure construction

Scheme	Functions
01	Distribution + compensation + metering
02	Distribution + compensation
03	Distribution + metering
04	Compensation + metering
05	Distribution
06	Metering
07	Compensation

ENCLOSURE DESIGN

The bent sheet frame is partly welded. A double-wall stainless steel insulated construction is available. Flanged door frames provide water run-off; a rain canopy and ventilation openings beneath the eaves, at the sides and at the base support weather protection and heat dissipation.

Separate metering and protection compartments may be provided to reduce unauthorised access and support safe operation. Cable entries may be on the left, right, top or bottom, separately or in combination. Alternative enclosure structures and circuit schemes require agreement.

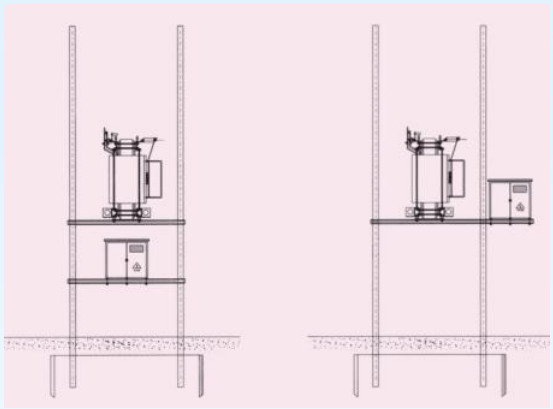

Source outline and installation views. Confirm dimensions for the selected configuration.

The source does not state a single IP rating for all JP variants. Specify the required enclosure rating and obtain confirmation for the supplied assembly.

LOW VOLTAGE SYSTEMS / 08

ATS

Automatic transfer switch panels

08



08 / ATS

Up to 400 V AC	50 Hz	Utility / generator
SYSTEM VOLTAGE	FREQUENCY	POWER SOURCES

OVERVIEW

ATS panels monitor two incoming supplies and transfer the load when the preferred source fails or falls outside the configured limits. Applications include hospitals, high-rise buildings, shopping centres, banks, industrial facilities and other essential loads.

CONTROL MODES

- Automatic transfer and automatic return: choose source 1 or source 2 as preferred; transfer back when it returns to normal.
- Automatic transfer without automatic return: retain the current source until it fails or is unacceptable.
- Utility / generator: start the generator following utility failure, transfer the load, return to utility after recovery and stop the generator into standby.

Electrical and mechanical interlocks prevent unintended simultaneous connection. Voltage, overcurrent and short-circuit protections depend on the selected switching devices and controller. Current rating, IP rating, dimensions and transfer timing must be specified at order.

Source reference: Chinese catalogue p. 14. The source also describes generator paralleling functions; these are separate from the basic ATS transfer duty.

LOW VOLTAGE SYSTEMS / 09

YL-XF and YL-FPY

Fire protection electrical control panels

09



09 / YL-XF AND YL-FPY

400 V AC	400 / 630 A	IP30 / IP40
OPERATING VOLTAGE	MAXIMUM CURRENT	PROTECTION

OVERVIEW

YL-XF panels control fire pumps. YL-FPY panels control smoke extraction and pressurisation fans and associated dual supplies. The assemblies combine transfer switches, automatic switches, AC contactors and motor protectors for motor short-circuit and overload protection.

CONSTRUCTION AND APPLICATIONS

Standardised compact enclosures have doors opening to 90° and removable electrical mounting plates. Typical applications include municipal and commercial buildings, hospitals, public venues, transport facilities, manufacturing, mining, cement and paper industries.

Characteristic	Specification
Rated insulation voltage	690 V
Maximum operating current	Wall-mounted: 400 A; floor-standing: 630 A

Standards cited in the source: GB 16806-2006; GB 7251; IEC 60439; EN 60439; VDE 0660 Part 500.

Source reference: Chinese catalogue pp. 15–16.

LOW VOLTAGE SYSTEMS / TECHNICAL DATA

YL-XF and YL-FPY

Service conditions and enclosure dimensions

OPERATING CONDITIONS

Indoor service at −5 to +40 °C; 24-hour mean up to +35 °C. Altitude up to 2000 m. Relative humidity up to 50% at +40 °C or 90% at +20 °C, with condensation considered. Install in a clean, non-corrosive location free from severe vibration. Special conditions require agreement with the manufacturer.

Equipment installed above 2000 m requires appropriate derating. The model code identifies the YL brand, application code XF for fire pump or FPY for fan, and project-specific circuit configuration.

Dimension	Wall-mounted	Floor-standing
Width	600 / 700	600 / 800 / 1000
Height	900 / 1000	1600 / 1800 / 2000 / 2200
Depth	250	400 / 600

INTERNAL EQUIPMENT LAYOUTS



Door-open view of floor-standing control equipment from the source.

Final component arrangement depends on motor output, control logic, transfer requirements and the fire protection system interface. Confirm the motor schedule and control schematic before ordering.

LOW VOLTAGE SYSTEMS / 10

GXL

Power distribution boxes

10

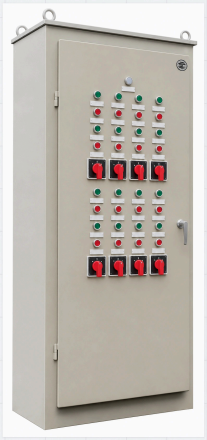

10 / GXL

Below 600 V AC	50 Hz	Up to 2000 m
APPLICATION VOLTAGE	FREQUENCY	ALTITUDE

OVERVIEW

Enclosed power and lighting distribution equipment for industrial, commercial, service and residential buildings. The source specifies three-phase three-wire or four-wire systems, using selected imported or domestic components.

CONSTRUCTION

The enclosure is welded from steel sheet or assembled from profiles. Internal mounting uprights support compact, accessible equipment. An isolator handle is located on the front right door. Voltmeters, ammeters, pilot lamps and push-buttons may be fitted to the door.

OPERATING CONDITIONS

Indoor service at −10 to +40 °C; 24-hour mean up to +35 °C. Altitude up to 2000 m. Relative humidity up to 50% at +40 °C or 90% at +20 °C, with condensation considered. Install in a clean, non-corrosive location free from severe vibration. Special conditions require agreement with the manufacturer.

Model coding identifies welded, general profile or C-profile construction, control configuration, isolator arrangement and whether a voltmeter is fitted. Specify the complete circuit schedule for ordering; current and IP ratings are not stated in the source.

Source reference: Chinese catalogue p. 17.

JXF

Distribution boxes

11



OVERVIEW

JXF distribution boxes supply lighting, motor starting, motor protection and socket circuits in power plants, substations, factories, schools and other buildings. Overload, short-circuit and residual current protection are provided as required by the selected configuration.

ENCLOSURE CONSTRUCTION

The enclosed housing is welded from cold-rolled steel sheet or assembled from profiles. Components mount on uprights or a full mounting plate. Standardised parts support interchangeability. The surface is powder-coated; door-mounted meters, pilot lamps and push-buttons support operation. A double mounting plate may be used to restrict direct access to live parts.

APPLICATION CODES FROM THE SOURCE

Function	Code	Function	Code
Lighting	M1 / ACM / ACP / SDB	Automatic changeover	QA / QD
Light control	GK	Emergency transfer	TA / TD
Remote control	YK	Maintenance	J
Time control	SK	Transformer	B
Socket box	C	Inverter	N
Sealed switch box	MK	Switch box	K
Sealed socket box	MC	Push-button box	A

Mounting code R identifies recessed installation. The source uses additional codes for surface mounting or universal enclosures. Confirm mounting, indoor/outdoor duty, circuit ratings and IP rating in the order.

Source reference: Chinese catalogue p. 18.

JL

Electricity metering boxes

12



OVERVIEW

JL metering boxes accommodate 50 Hz single-phase residential metering, typically in shared building areas or sheltered positions. Surface-mounted and recessed versions are available, with circuit residual current or short-circuit protection according to the selected arrangement.

SERVICE CONDITIONS

Altitude up to 2000 m; ambient temperature −25 to +40 °C; relative humidity up to 90% at +20 ±5 °C. Install within 5° of vertical, protected from rain and snow, without severe vibration, explosive hazards, corrosive gases or conductive dust.

Meter count	A	B
1	295	225
2	435	365
3	555	485
4	695	625

Welded sheet-steel boxes include a frame, lockable door, switchgear and meters. The source describes a timber meter backboard, a viewing window and a lower-left earthing bolt; final construction must follow the approved specification. Paint colour is selectable.

Source reference: Chinese catalogue pp. 19–20.

LOW VOLTAGE SYSTEMS / 13

PZ30 family

Modular distribution and metering enclosures

13



13 / PZ30 FAMILY

220 / 380 V AC	50 Hz	18 mm
OPERATING VOLTAGE	FREQUENCY	DEVICE MODULE

OVERVIEW

PZ30 provides modular terminal distribution. PZ30N adds single-phase metering. PZ30B and PZ30T offer alternative enclosure arrangements. Recessed and surface-mounted sizes are listed on the following pages.

Source reference: Chinese catalogue pp. 21–22.

ENCLOSURE VARIANTS

Plastic-panel and coated steel versions are shown in the source. Neutral terminals and removable panels support wiring and servicing. Choose the required circuit count, mounting arrangement, terminal devices and protection functions before selecting an enclosure.

LOW VOLTAGE SYSTEMS / TECHNICAL DATA

PZ30 and PZ30N

Dimensions and electrical applications

PZ30 plastic-panel distribution boxes offer removable fronts and neutral terminals for modular final circuits. PZ30N, formerly PZ40, accommodates 220 V single-phase meters and 18 mm modular switching devices for residential and commercial distribution.

PZ30 DIMENSIONS

Model	Recessed A × B × C	Surface A × B × C
2-way	150 × 85 × 80	180 × 120 × 80
4-way	160 × 140 × 85	187 × 167 × 85
6-way	200 × 170 × 90	227 × 197 × 90
8-way	200 × 210 × 90	237 × 227 × 90
10-way	260 × 260 × 90	287 × 287 × 90
12-way	260 × 300 × 90	287 × 327 × 90
15-way	260 × 300 × 90	287 × 377 × 90
18-way	260 × 400 × 90	287 × 427 × 90
20-way	260 × 460 × 90	487 × 287 × 90
24-way	350 × 460 × 90	487 × 327 × 90
30-way	400 × 460 × 90	487 × 377 × 90
36-way	400 × 460 × 90	487 × 427 × 90
45-way	640 × 350 × 90	667 × 377 × 90
60-way	460 × 700 × 90	480 × 727 × 90

PZ30N DIMENSIONS

Meter positions	A × B × C
1	420 × 270 × 140
2	420 × 380 × 140
3	420 × 520 × 140
4	420 × 600 × 140

Source reference: Chinese catalogue p. 21. Verify dimensions against the selected enclosure drawing.

LOW VOLTAGE SYSTEMS / TECHNICAL DATA

PZ30B and PZ30T

Modular terminal enclosure variants

PZ30B, formerly BCDR, and PZ30T, formerly TSPS, accept 18 mm terminal devices for 50 Hz, 220 / 380 V residential, station, commercial and industrial circuits. Protection against overload, short circuit, overvoltage and earth leakage depends on the installed devices.

STEEL PZ30 SURFACE-MOUNTED BOXES

Model	A × B × C
12-way	340 × 340 × 70
14-way	376 × 340 × 70
24-way	470 × 340 × 70

PZ30B DIMENSIONS

Model	Recessed A × B × C	Surface A × B × C
104	155 × 210 × 70	130 × 180 × 70
204	210 × 280 × 100	180 × 250 × 85
207	255 × 320 × 100	225 × 290 × 85
210	255 × 370 × 100	225 × 340 × 85
214	255 × 455 × 100	225 × 415 × 85
218	255 × 520 × 100	225 × 490 × 85

PZ30T DIMENSIONS

Model	Recessed A × B × C	Surface A × B × C
007	210 × 205 × 90	230 × 255 × 90
010	210 × 255 × 90	230 × 280 × 90
012	210 × 295 × 90	230 × 315 × 90
016	210 × 360 × 90	230 × 385 × 90
020	210 × 436 × 90	230 × 456 × 90
024	435 × 295 × 90	460 × 315 × 90
032	440 × 260 × 90	460 × 385 × 90
040	435 × 435 × 90	460 × 455 × 90
048	660 × 365 × 90	685 × 690 × 90

Source reference: Chinese catalogue p. 22. Source dimensions contain apparent inconsistencies; confirm before manufacture.

LOW VOLTAGE SYSTEMS / 14

JXF cable branch box

Outdoor cable distribution equipment

14



14 / JXF CABLE BRANCH BOX

OVERVIEW

Cable branch boxes use pre-moulded silicone rubber or EPDM cable connectors in a compact enclosed arrangement. Configurations may be combined with an SF6 load-break switch for ring-network distribution. The source promotes reduced cable length and flexible installation.

SERVICE CONDITIONS

Characteristic	Specification
Ambient temperature	−30 to +40 °C
Wind speed / pressure	Up to 34 m/s / 700 Pa
Daily / monthly relative humidity	≤95% / ≤95%
Seismic acceleration	Horizontal ≤0.4 m/s²; vertical ≤0.15 m/s²
Installation inclination	≤3°
Site conditions	No significant corrosive or combustible gas or water-vapour contamination; no severe vibration

The source describes applications involving heat, cold, dust and water exposure but supplies no tested ingress rating or immersion duration. Confirm voltage, current, connector type, earthing, protection and environmental test evidence for the selected product. A 20-year paint statement in the source is not treated as a verified warranty.

Source reference: Chinese catalogue p. 23.

02

MEDIUM VOLTAGE SYSTEMS

Metal-clad switchgear, ring main units and substations



PRODUCT DATA / CONFIGURATION / INSTALLATION

Detailed electrical ratings, service conditions and dimensional data are provided on the following pages. Confirm the selected configuration against the approved project documents.

MEDIUM VOLTAGE SYSTEMS / 15

KYN28A-12

Indoor metal-clad withdrawable switchgear

15



15 / KYN28A-12

Up to 12 kV	630–3150 A	IP4X / IP2X
EQUIPMENT VOLTAGE	RATED CURRENT	PROTECTION

OVERVIEW

KYN28A-12 (GZS1) serves 3–10 kV, three-phase 50 Hz single-busbar and sectionalised single-busbar networks. Applications include power plants, industrial distribution, secondary substations and large high voltage motor starting, with control, protection and monitoring functions.

The source identifies VS1 and ABB VD4 vacuum circuit-breaker options. Interlocks prevent moving a closed breaker, incorrect breaker operation, closing with the earthing switch engaged, entering a live compartment and earthing a live circuit.

TECHNICAL DATA

Characteristic	Specification
1 min power-frequency withstand	42 kV
Lightning impulse withstand	75 kV peak
4 s short-time withstand current	16–50 kA, dependent on configuration
Peak withstand current	40–125 kA
Control and auxiliary voltage	DC 24 / 30 / 48 / 60 / 110 / 220 V; AC 110 / 220 V

Standards cited in the source: GB 3906; DL 404; IEC 298.

Source reference: Chinese catalogue pp. 24–25.

MEDIUM VOLTAGE SYSTEMS / TECHNICAL DATA

KYN28A-12

Circuit-breaker data and dimensions

SERVICE CONDITIONS

Ambient temperature −15 to +40 °C; altitude up to 1000 m. Daily mean relative humidity up to 95%; monthly mean up to 90%. Seismic intensity up to 8 degrees as stated in the source. No fire or explosion hazard, severe contamination, corrosive gas or severe vibration. Agree special conditions before ordering.

VS1 AND VD4 CIRCUIT-BREAKER SELECTION DATA

Characteristic	VS1	VD4
Rated frequency	50 Hz	50 Hz
Rated voltage class	3.6 / 7.2 / 12 kV	3.6 / 7.2 / 12 kV
Short-circuit breaking current	16 / 20 / 25 / 31.5 / 40 / 50 kA	Select by breaker model
Short-circuit making current peak	40 / 50 / 63 / 80 / 100 / 125 kA	Select by breaker model
Closing time	≤100 ms	Approximately 70 ms
Opening time	≤50 ms	≤45 ms
Arcing time	≤15 ms	≤15 ms
Breaking time	Approximately 65 ms	≤60 ms

The source gives a common current range from 630 to 3150 A; intermediate options and breaking duties must be matched to the breaker and current transformer. Source operation sequences include O–0.3 s–CO–3 min–CO and a multiple-reclosing option O–0.3 s–CO–15 s–CO–15 s–CO. Confirm the applicable breaker duty.

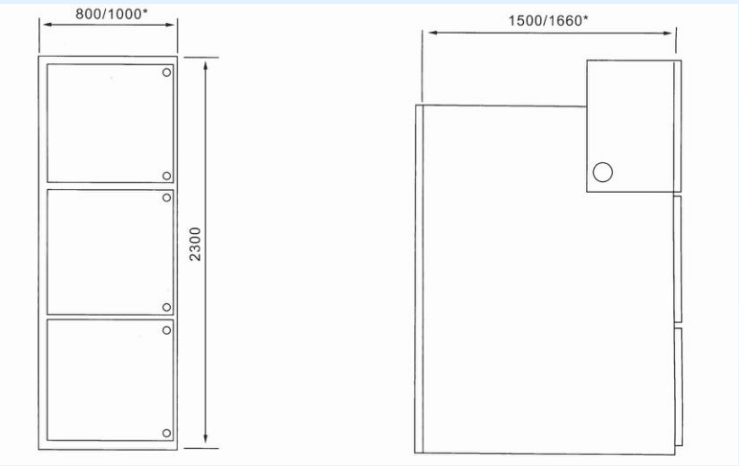

Width 800 mm up to 1600 A; 1000 mm above 1600 A. Height 2300 mm. Depth 1500 mm for cable connection or 1660 mm for overhead connection.

MEDIUM VOLTAGE SYSTEMS / 16

KYN28A-24

Metal-clad withdrawable switchgear

16



16 / KYN28A-24

24 kV	Up to 3150 A	IP4X / IP2X
RATED VOLTAGE	RATED CURRENT	PROTECTION

OVERVIEW

Indoor metal-clad withdrawable switchgear with closed-door operation, segregated metal compartments and interchangeable withdrawable trucks. A compact main-circuit insulation arrangement and a spacious cable compartment support installation and maintenance.

SERVICE CONDITIONS

Ambient temperature −10 to +40 °C; altitude up to 2000 m. Daily mean relative humidity up to 95%; monthly mean up to 90%. Seismic intensity up to 8 degrees as stated in the source. No fire or explosion hazard, severe contamination, corrosive gas or severe vibration. Agree special conditions before ordering.

MODEL IDENTIFICATION

KYN identifies metal-clad, withdrawable indoor equipment; 28A is the design series; 24 is the voltage class. The remaining fields identify the rated current and circuit scheme. Confirm the complete model and circuit arrangement in the technical schedule.

Source reference: Chinese catalogue pp. 26–27. Current rating with an asterisk is printed without a clear explanatory note; confirm the selected 3150 A design.

MEDIUM VOLTAGE SYSTEMS / TECHNICAL DATA

KYN28A-24

Electrical data and operating interlocks

Characteristic	Specification
Rated voltage / frequency	24 kV / 50 Hz
Power-frequency withstand, 1 min	65 kV
Lightning impulse withstand	125 kV peak
Main and branch busbar ratings	1250 / 1600 / 2000 / 2500 / 3150 A
Short-time withstand current, 4 s	25 / 31.5 / 40 kA
Peak withstand current	63 / 80 / 100 kA
Auxiliary power supply	DC 110 / 220 V
Enclosure / breaker door open	IP4X / IP2X
Weight	850–1450 kg

OPERATING INTERLOCKS

- Move the truck from test to service only with the breaker open and the earthing switch open.
- Withdraw the truck from service to test only with the breaker open.
- Operate the breaker only when the truck is locked in its test or service position.
- Operate the earthing switch only with the truck locked in test position and the cable compartment door closed.

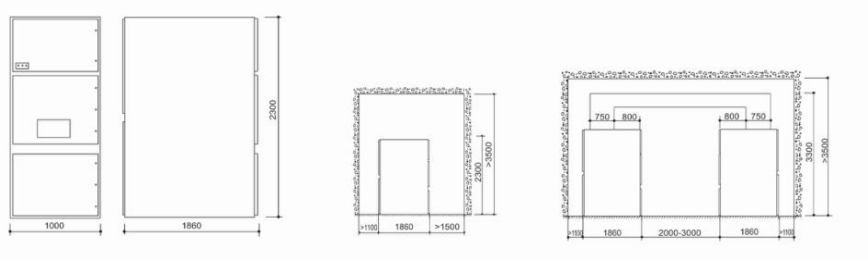

Outline, single-row and double-row arrangements. The drawing indicates W 1000 × D 1860 × H 2300 mm. The source table conflicts with this drawing; final dimensions require confirmation.

MEDIUM VOLTAGE SYSTEMS / 17

KYN61Y-40.5

Metal-clad withdrawable switchgear

17



17 / KYN61Y-40.5

40.5 kV	2500 A	IP4X / IP2X
RATED VOLTAGE	MAIN BUSBAR	PROTECTION

OVERVIEW

KYN61Y-40.5, also referred to as KYN61-40.5 in the source body text, is designed for 50 Hz, 40.5 kV single-busbar and sectionalised single-busbar power systems. It receives and distributes energy and provides circuit control, protection and monitoring.

CONSTRUCTION AND SERVICE

Closed-door operation, metal-clad compartments, interchangeable trucks, a spacious cable compartment and mechanical interlocks support operation and maintenance.

Ambient temperature −10 to +40 °C; altitude up to 2000 m. Daily mean relative humidity up to 95%; monthly mean up to 90%. Seismic intensity up to 8 degrees as stated in the source. No fire or explosion hazard, severe contamination, corrosive gas or severe vibration. Agree special conditions before ordering.

Standards cited in the source: IEC 60298; GB 3906; DL 404. The source states type testing at a national high voltage test centre; report not supplied.

Source reference: Chinese catalogue pp. 28–29.

MEDIUM VOLTAGE SYSTEMS / TECHNICAL DATA

KYN61Y-40.5

Ratings and interlock conditions

Characteristic	Specification
Rated voltage / frequency	40.5 kV / 50 Hz
Power-frequency withstand, 1 min	95 kV
Lightning impulse withstand	185 kV peak
Main busbar rated current	2500 A
Branch busbar rated current	1250 / 1600 / 2000 A
Short-time withstand current, 4 s	25 / 31.5 kA
Peak withstand current	63 / 80 kA
Auxiliary supply	DC 110 / 220 V
Enclosure / breaker door open	IP4X / IP2X
Overall size W × D × H	1200 (1400) × 2565 (2665 / 2865) × 2400
Weight	850–1850 kg

INTERLOCKS

For insertion from test to service, the breaker and earthing switch must both be open. For withdrawal to test, the breaker must be open. The breaker operates only with the truck locked in test or service. The earthing switch operates only with the truck in test and the cable compartment door closed.

ORDERING

Confirm busbar current, breaker duty, control voltage, cable arrangement, cabinet width and depth, internal compartment layout and required verification documentation. Alternative dimensions listed in the source depend on configuration.

MEDIUM VOLTAGE SYSTEMS / 18

KYN1-10

Indoor AC metal-clad withdrawable switchgear

18



18 / KYN1-10

3 / 6 / 10 kV	630–3150 A	IP2X
SYSTEM VOLTAGE	RATED CURRENT	PROTECTION

OVERVIEW

Indoor switchgear for 50 Hz, unearthed-neutral, single-busbar or sectionalised single-busbar systems. It receives and distributes energy in power plants, substations and industrial facilities, providing control, protection and monitoring.

A welded sheet-steel and angle-steel structure is divided by earthed metal partitions. The cabinet comprises a front section, rear section, relay / instrument assembly, withdrawable truck and pressure-relief provisions. Overhead or cable connections and left / right coupling arrangements are available.

Standards cited in the source: GB 3906; IEC 298.

Source reference: Chinese catalogue pp. 30–31.

OPERATING CONDITIONS

Ambient temperature −15 to +40 °C; altitude up to 1000 m. Daily mean relative humidity up to 95%; monthly mean up to 90%. Seismic intensity up to 8 degrees as stated in the source. No fire or explosion hazard, severe contamination, corrosive gas or severe vibration. Agree special conditions before ordering.

MEDIUM VOLTAGE SYSTEMS / TECHNICAL DATA

KYN1-10

Electrical ratings and installation notes

Characteristic	Specification
Maximum equipment voltage	3.6 / 7.2 / 12 kV
Rated current options	630 / 1000 / 1250 / 1600 / 2500 / 3150 A
Short-circuit breaking current	12.5 / 16 / 20 / 31.5 / 40 kA
Short-circuit making current peak	31.5 / 40 / 50 / 80 / 100 kA
4 s thermal withstand current	12.5 / 16 / 20 / 31.5 / 40 kA
Dynamic withstand peak	31.5 / 40 / 50 / 80 / 100 kA
Protection	IP2X
Overall dimensions in source table	840 × 1500 × 2280 cable; 840 × 1650 × 2280 overhead
Weight	<1000 kg

SOURCE DIMENSION DISCREPANCY

The dimensional drawing notes cable cabinet depth 1650 mm and overhead cabinet depth 1800 mm, while the table gives 1500 and 1650 mm. The drawing specifies 1000 mm width above 1600 A, compared with a standard 840 mm width. Obtain a confirmed general arrangement before manufacture or foundation work.

ORDERING REQUIREMENTS

- Provide primary circuit scheme numbers, system diagram and cabinet arrangement.
- Provide control schematics and terminal plans, plus primary and secondary component ratings and quantities.
- Specify busbar type, size and bridge spans. Identify special environmental conditions.

MEDIUM VOLTAGE SYSTEMS / 19

HXGN-10

Fixed metal-enclosed ring main switchgear

19



19 / HXGN-10

10 kV	12 kV	50 Hz
SYSTEM VOLTAGE	EQUIPMENT CLASS	FREQUENCY

OVERVIEW

Indoor ring main switchgear for industrial premises, residential developments and high-rise buildings. It receives, distributes and protects energy in ring or dual-source radial networks and may be installed in a prefabricated substation.

The profile-assembled cabinet has busbars at the top, an instrument zone at the front, a load-break switch in the upper central area and cable connections, CTs and VTs below. Compartments are segregated. The source specifies ISARC or FN12A-10D/630 air load-break switch options and mechanical anti-maloperation interlocks.

Standards cited in the source: GB 3906; GB 3804-90; IEC 298; IEC 420.

Source reference: Chinese catalogue pp. 32–33.

SERVICE CONDITIONS

Ambient temperature −15 to +40 °C; altitude up to 1000 m. Daily mean relative humidity up to 95%; monthly mean up to 90%. Seismic intensity up to 8 degrees as stated in the source. No fire or explosion hazard, severe contamination, corrosive gas or severe vibration. Agree special conditions before ordering.

MEDIUM VOLTAGE SYSTEMS / TECHNICAL DATA

HXGN-10

FN12A and ISARC configuration data

Characteristic	Specification
Rated / maximum operating voltage	10 / 12 kV
Rated current as printed	1630 A — inconsistent; requires confirmation
Incoming / outgoing main circuit current	630 A / 125 A
Short-time withstand current / duration	20 kA / 4 s
Peak withstand current	50 kA
Short-circuit making current	31.5 kA peak
Active-load / closed-loop breaking current	630 A / 630 A
Cable charging current as printed	25 kA — unit requires confirmation
Power-frequency withstand, 1 min	42 kV phase-to-phase / earth; 48 kV across open switch
Lightning impulse withstand	75 kV phase-to-phase / earth; 85 kV across open switch
Mechanical endurance	2000 operations
Transfer current	1250 / 1500 A with an unexplained source asterisk

ORDERING INFORMATION

Provide primary and secondary schematics, the cabinet arrangement and floor plan, component names / models / ratings / quantities, busbar specifications, spares and all special requirements. The source does not provide a clear HXGN-10 enclosure IP rating.

MEDIUM VOLTAGE SYSTEMS / 20

XGN15-12 F and F R

Metal-enclosed ring main switchgear

20



12 kV	630 A	IP3X
RATED VOLTAGE	MAIN BUSBAR	PROTECTION

OVERVIEW

XGN15-12(F) load-break switch units and XGN15-12(F·R) switch-fuse units serve three-phase 50 Hz networks. The riveted enclosure uses CNC-processed aluminium-zinc-coated sheet. Manual and motor-operated arrangements are available.

The source identifies ABB SFL-12/24 or FLN36-12D SF6 switching units, with optional ABB HAD/US SF6 or VD4-S vacuum circuit breakers. Component availability and exact model compatibility require confirmation.

Characteristic	F	F·R
Rated voltage / frequency	12 kV / 50 Hz	12 kV / 50 Hz
Busbar rated current	630 A	630 A
Maximum fuse current	—	125 A
Main circuit withstand	20 kA / 3 s	20 kA / 3 s
Prospective short-circuit breaking current	—	50 kA
1 min withstand phase-earth / open gap	42 / 48 kV	42 / 48 kV
Impulse phase-earth / open gap	75 / 85 kV	75 / 85 kV

Standards cited in the source: IEC 60298; GB 3906.

Source reference: Chinese catalogue pp. 34–35.

MEDIUM VOLTAGE SYSTEMS / TECHNICAL DATA

XGN15-12 F and F R

Interlocks and operating arrangement

MECHANICAL INTERLOCKS

- The load-break switch cannot close with the earthing switch closed.
- The earthing switch cannot operate with the load-break switch closed.
- The front door may open only with the load-break switch open and the earthing switch closed.
- The load-break switch cannot close with the front door open.
- Coupler and cable-incoming configurations have compulsory interlocking between the door and incoming cable arrangement.

OPERATION

Use the dedicated front operating handle. The upper aperture operates the earthing switch; the lower aperture operates the load-break switch. Clockwise rotation closes and anticlockwise rotation opens, as described in the source. Motor operation may be fitted for remote opening and closing. In versions without an earthing switch, the upper aperture may release the door interlock.

In switch-fuse units, a manual opening button trips the load-break switch. Upper and lower earthing switches operate together through a linkage; the lower switch discharges residual current at the lower fuse contact to improve fuse-replacement safety. Follow the supplied operating manual and safety procedures for the actual configuration.

OUTLINE DIMENSIONS

Dimension	Source drawing
Cabinet width	375 / 500 mm
Cabinet depth	900 mm
Height	Select and confirm the cabinet arrangement

The source drawing identifies front and side views. Obtain an approved dimensional drawing including cable support and terminal locations before installation.

MEDIUM VOLTAGE SYSTEMS / 21

HXGN15-12

SF6 ring main switchgear

21



21 / HXGN15-12

12 kV	1250 A	IP4X / IP2X
RATED VOLTAGE	MAIN BUSBAR	PROTECTION

OVERVIEW

Compact AC ring main switchgear for urban power network construction and refurbishment. Front-mounted controls and interlocks allow wall-side installation. Modular switch arrangements support replacement and servicing, with accessible cable connections.

OPERATING CONDITIONS

Ambient temperature −25 to +40 °C; altitude up to 1000 m. Daily mean relative humidity up to 95%; monthly mean up to 90%. Seismic intensity up to 8 degrees as stated in the source. No fire or explosion hazard, severe contamination, corrosive gas or severe vibration. Agree special conditions before ordering.

SAFETY PROVISIONS

The source describes earthed metal continuity, mechanical sequencing interlocks, a rear gas-release path, optional key or sequence locks, an earthing switch with making capability and voltage indication. A closed door and open earthing switch are required before closing the load-break switch.

Standards cited in the source: IEC 298; GB 3906. No internal arc classification is supplied.

Source reference: Chinese catalogue pp. 36–37.

MEDIUM VOLTAGE SYSTEMS / TECHNICAL DATA

HXGN15-12

Configuration ratings

Characteristic	LBS unit	Switch-fuse	Breaker unit
Voltage / frequency	12 kV / 50 Hz	12 kV / 50 Hz	12 kV / 50 Hz
Main busbar current	1250 A	1250 A	1250 A
Main circuit current	630 A	200 A	1250 A
Closed-loop breaking current	630 A	—	—
Cable charging breaking current, source unit	35 kA*	—	—
SF6 gauge pressure at 20 °C	0.045 MPa	0.045 MPa	—
Circuit resistance as printed	≥400 μΩ*	≥400 μΩ*	≥400 μΩ*
Thermal withstand current	20 kA	20 kA	20 kA
Peak withstand current	50 kA	50 kA	50 kA
Switch mechanical endurance	3000 ops	3000 ops	3000 ops as printed
Earthing switch endurance	1000 ops	1000 ops	1000 ops
1 min withstand, phase-earth / gap	42 / 48 kV	42 / 48 kV	42 / 48 kV
Impulse withstand, phase-earth / gap	75 / 85 kV	75 / 85 kV	75 / 85 kV
Enclosure protection	IP4X	IP4X	IP4X

ABB SFG option in the source: 25 kA for 2 s, 63 kA peak; 5000 load-break switch operations and 2000 earthing switch operations. Internal segregation is stated as IP2X.

* The source cable-charging current unit and resistance inequality appear inconsistent with the parameter meaning. They are retained for traceability and require engineering correction before issue. Short-time duration for the standard 20 kA configuration is not stated.

MEDIUM VOLTAGE SYSTEMS / 22

XGN2-10

Fixed AC metal-enclosed switchgear

22



22 / XGN2-10

3 / 6 / 10 kV	Up to 3000 A	IP2X
SYSTEM VOLTAGE	RATED CURRENT	PROTECTION

OVERVIEW

Indoor fixed switchgear for three-phase 50 Hz systems, with single-busbar, single-busbar with bypass and derived double-busbar arrangements. The assembly receives and distributes energy and provides circuit control, protection and monitoring.

The welded angle-steel frame is divided into breaker, busbar, cable and instrument compartments by metal partitions. Mechanical interlocks provide the source's five anti-maloperation functions. The source names SN10-10 and ZN28A-10 main switches with CD10 / CT8 or CD17 / CT17 / CT19B operating mechanisms, and GN30-10 rotating disconnectors; confirm the actual device technology and pairing.

SERVICE CONDITIONS

Ambient temperature −15 to +40 °C; altitude up to 1000 m. Daily mean relative humidity up to 95%; monthly mean up to 90%. Seismic intensity up to 8 degrees as stated in the source. No fire or explosion hazard, severe contamination, corrosive gas or severe vibration. Agree special conditions before ordering.

Standards cited in the source: GB 3906, misprinted as GB 3960 in one source paragraph; IEC 298.

Source reference: Chinese catalogue pp. 38–39.

MEDIUM VOLTAGE SYSTEMS / TECHNICAL DATA

XGN2-10

Ratings and compartment arrangement

Characteristic	Specification
Rated voltage / maximum voltage in source	3 / 6 / 10 kV; maximum 3.6 / 6.9 / 11.5 kV
Rated current	1000 A; 1250–3000 A configurations
Breaking / thermal withstand current	12.5 / 20 / 25 / 31.5 / 40 kA
Making / dynamic withstand peak	31.5 / 50 / 63 / 80 / 100 kA
Thermal withstand duration	4 s
Operating mechanisms	CD10 electromagnetic; CT8 spring variants
Standard widths / heights	1100 or 1200 / 2650
Standard depths	1200 or 1520
Approximate weight	1000 or 1300 kg

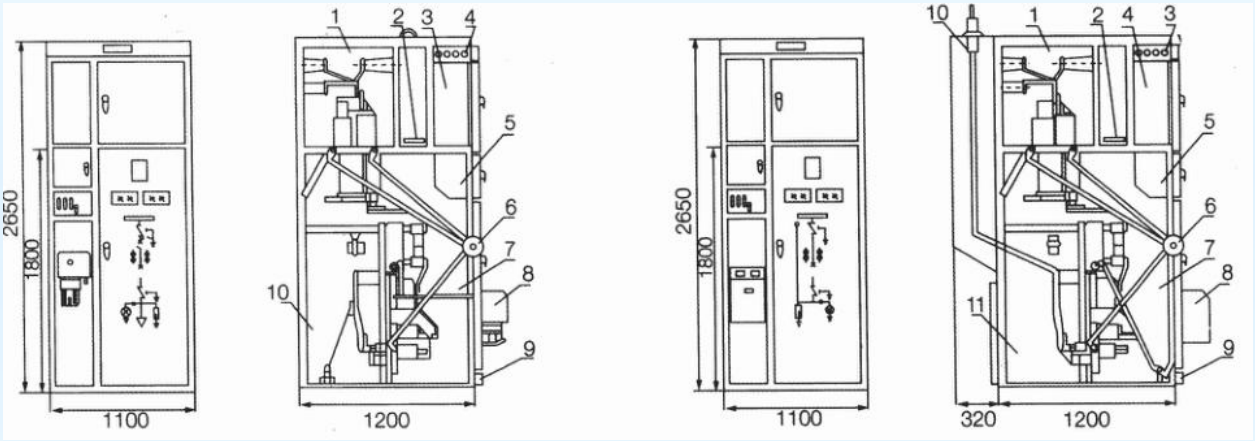

Electromagnetic and spring-operated source arrangements. Verify dimensional combinations for the selected circuit.

Diagram legend: 1 busbar compartment; 2 pressure-release duct; 3 instrument or secondary-busbar compartment; 4 secondary-busbar or instrument compartment; 5 combined-switch compartment; 6 manual operation and interlock; 7 main switch compartment; 8 operating mechanism; 9 earth busbar; 10 cable or overhead-busbar compartment; 11 cable compartment in spring variant.

MEDIUM VOLTAGE SYSTEMS / 23

YB

Prefabricated substations

23



23 / YB

Project specified	Dry type / oil	Outdoor
HV / LV ARRANGEMENT	TRANSFORMER	INSTALLATION

OVERVIEW

YB prefabricated substations combine high voltage switchgear, a transformer and low voltage distribution in one outdoor enclosure. Applications include urban public distribution, street lighting, industrial facilities, residential developments, hotels, parks, mountainous areas and construction sites. Ring and terminal supply arrangements are available.

OPERATING CONDITIONS

Characteristic	Specification
Altitude	≤1000 m
Ambient temperature	−30 to +40 °C
Maximum monthly / annual mean	+30 °C / +20 °C
Daily / monthly mean relative humidity	≤95% / ≤90%
Seismic acceleration as printed	Horizontal 0.4 m/s²; vertical 0.15 m/s²
Installation environment	No severe shock, pollution, chemical corrosion, conductive dust or explosive hazard

Standards cited in the source: GB/T 17467-1988 as printed. For project specification, consider GB/T 17467-2020 and IEC 62271-202:2022, subject to design confirmation.

Source reference: Chinese catalogue pp. 40–41.

MEDIUM VOLTAGE SYSTEMS / TECHNICAL DATA

YB

Enclosure options and compartment design

INTEGRATED ARRANGEMENT

In-line and clustered layouts are described in the source. The structure uses welded steel sections and angle steel, with aluminium-profile or selected panel enclosures. Lifting provisions support transport and positioning. Compartment lighting can switch on automatically when the doors open.

HIGH VOLTAGE COMPARTMENT

Ring main switchgear may use air or vacuum load-break switching; the source also identifies SF6, FZN57 and VHC options. Mechanical interlocks address incorrect operation. With current-limiting fuses, operation of one fuse trips the load-break switch to avoid single-phase running.

TRANSFORMER COMPARTMENT

Dry-type or oil-immersed transformers may be selected. Oil designs may use a conservator or a fully sealed construction. Natural ventilation and temperature-controlled forced air cooling manage heat. Anti-condensation provisions and transformer rails may be specified.

LOW VOLTAGE COMPARTMENT

Select power and lighting distribution, automatic reactive power compensation and electricity metering functions. Match the circuit scheme, protective devices and ratings to the transformer and load schedule.

ENCLOSURE FINISHES

The source lists composite panel, stainless steel composite panel, aluminium-zinc-coated sheet, stainless steel and decorative metal panel options. Select the required corrosion resistance, weather protection, colour, dimensions and access arrangement for the installation.

HV voltage, LV voltage and transformer capacity are model-code fields. The source supplies no universal electrical rating or IP rating for all YB versions; use the confirmed project schedule.