CABLE MANAGEMENT / ENGLISH CATALOGUE

A clear path. For every cable.

Cable Tray Systems

5 structural families. 148 size references.
Matched fittings, materials and project selection.

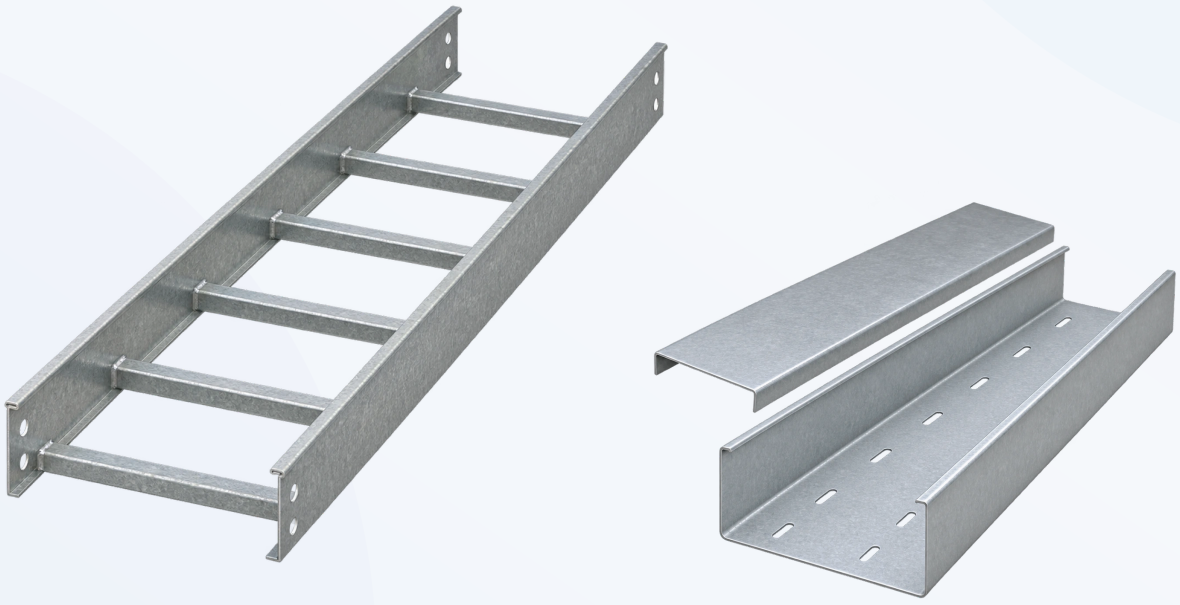

DESIGNED AROUND THE ROUTE

Reference sizes support project enquiries. Supplied dimensions, materials, finishes, load/span performance and availability are confirmed with the quotation. Images illustrate structural families.

CHOOSE THE STRUCTURE

From straight sections to the complete route.

Solid-Bottom Cable Tray 03
24 size references

Perforated Cable Tray 05
28 size references

Cable Ladder 07
24 size references

Wire Mesh Cable Tray 09
36 size references

Metal Cable Trunking 11
36 size references

W x H x L = width x side height x length, in millimetres. Nominal side heights are 50, 100, 150 and 200 mm; section length is 2000 mm. Overall and usable dimensions require drawing confirmation. These are selection references, not an inventory list or evidence of product certification.

STRUCTURAL FAMILY / 24 SIZE REFERENCES

Solid-Bottom Cable Tray

Continuous support for power and control cables, with separately selected covers and dividers.



Illustrative family image. Covers, couplers and supports are selected separately.

CONFIGURATION & PROJECT REVIEW

Solid bottom does not mean sealed or IP-rated. Confirm connector holes, cover fixing, thickness and effective cable space.

Request material, finish, nominal/minimum thickness, cover, cable load and support spacing. Alternate materials need their own section design and verified load/span performance.

Explore sizes and prepare an enquiry online

youli-electric-global.vercel.app/cable-trays/solid-trough/

WIDTH x SIDE HEIGHT x LENGTH / mm

Solid-Bottom Cable Tray

Each width below uses a 2000 mm section length and nominal heights of 50, 100, 150 or 200 mm. Confirm the offered drawing, thickness and material.

WIDTH	LENGTH	NOMINAL SIDE HEIGHT OPTIONS	THICKNESS*
100	2000	50 / 100 / 150 / 200	Confirm
200	2000	50 / 100 / 150 / 200	Confirm
300	2000	50 / 100 / 150 / 200	Confirm
400	2000	50 / 100 / 150 / 200	Confirm
500	2000	50 / 100 / 150 / 200	Confirm
600	2000	50 / 100 / 150 / 200	Confirm

1. Nominal enquiry dimensions; supplied geometry, usable space, joint overlap and load/span to confirm.

* Sheet thickness, or wire diameter for mesh; nominal/minimum to confirm. Section length is not the permitted support span.

STRUCTURAL FAMILY / 28 SIZE REFERENCES

Perforated Cable Tray

Solid sidewalls, inward-folded top lips and a sparsely perforated base, with a separately selected matching cover.

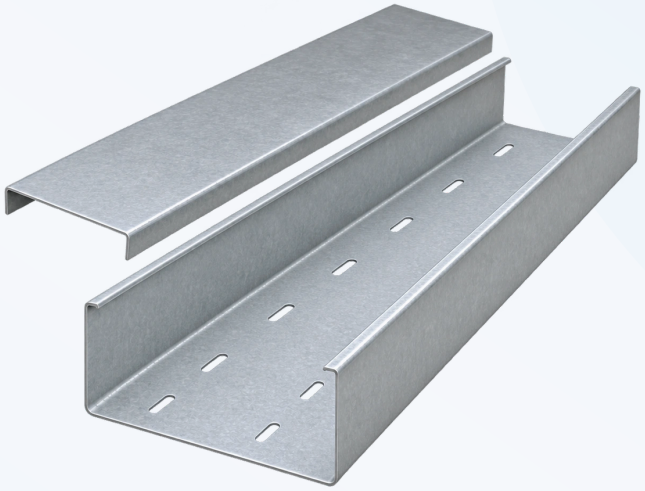

Illustrative family image. Covers, couplers and supports are selected separately.

CONFIGURATION & PROJECT REVIEW

Floor slots are spaced apart; both sidewalls are solid. Confirm slot size, spacing, cover and joint overlap on the drawing. Nominal heights are 50, 100, 150 or 200 mm; section length is 2000 mm.

Request material, finish, nominal/minimum thickness, cover, cable load and support spacing. Alternate materials need their own section design and verified load/span performance.

Explore sizes and prepare an enquiry online

youli-electric-global.vercel.app/cable-trays/perforated-tray/

WIDTH x SIDE HEIGHT x LENGTH / mm

Perforated Cable Tray

Each width below uses a 2000 mm section length and nominal heights of 50, 100, 150 or 200 mm. Confirm the offered drawing, thickness and material.

WIDTH	LENGTH	NOMINAL SIDE HEIGHT OPTIONS	THICKNESS*
100	2000	50 / 100 / 150 / 200	Confirm
150	2000	50 / 100 / 150 / 200	Confirm
200	2000	50 / 100 / 150 / 200	Confirm
300	2000	50 / 100 / 150 / 200	Confirm
400	2000	50 / 100 / 150 / 200	Confirm
500	2000	50 / 100 / 150 / 200	Confirm
600	2000	50 / 100 / 150 / 200	Confirm

1. Nominal enquiry dimensions; supplied geometry, usable space, joint overlap and load/span to confirm.

* Sheet thickness, or wire diameter for mesh; nominal/minimum to confirm. Section length is not the permitted support span.

STRUCTURAL FAMILY / 24 SIZE REFERENCES

Cable Ladder

Open rung construction for cable routing, with side rails, matched fittings and project-selected supports.



Illustrative family image. Covers, couplers and supports are selected separately.

CONFIGURATION & PROJECT REVIEW

Confirm rung spacing, usable cable depth, joint arrangement and load/span table. A 2000 mm section length does not establish the allowable support span.

Request material, finish, nominal/minimum thickness, cover, cable load and support spacing. Alternate materials need their own section design and verified load/span performance.

Explore sizes and prepare an enquiry online

youli-electric-global.vercel.app/cable-trays/ladder-tray/

WIDTH x SIDE HEIGHT x LENGTH / mm

Cable Ladder

Each width below uses a 2000 mm section length and nominal heights of 50, 100, 150 or 200 mm. Confirm the offered drawing, thickness and material.

WIDTH	LENGTH	NOMINAL SIDE HEIGHT OPTIONS	THICKNESS*
100	2000	50 / 100 / 150 / 200	Confirm
200	2000	50 / 100 / 150 / 200	Confirm
300	2000	50 / 100 / 150 / 200	Confirm
400	2000	50 / 100 / 150 / 200	Confirm
500	2000	50 / 100 / 150 / 200	Confirm
600	2000	50 / 100 / 150 / 200	Confirm

1. Nominal enquiry dimensions; supplied geometry, usable space, joint overlap and load/span to confirm.

* Sheet thickness, or wire diameter for mesh; nominal/minimum to confirm. Section length is not the permitted support span.

STRUCTURAL FAMILY / 36 SIZE REFERENCES

Wire Mesh Cable Tray

Welded wire basket for accessible cable routing, with system-specific couplers, bends and supports.

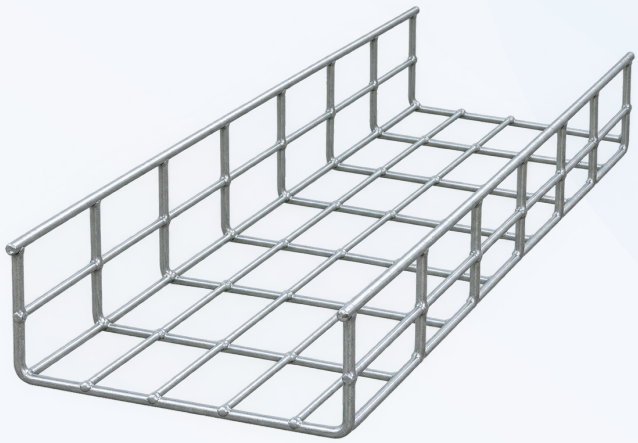

Illustrative family image. Covers, couplers and supports are selected separately.

CONFIGURATION & PROJECT REVIEW

Dimensions are nominal. Confirm wire diameter, external dimensions, safety-edge design, cut-edge treatment and joining method. Material and finish are separate quotation choices.

Request material, finish, nominal/minimum thickness, cover, cable load and support spacing. Alternate materials need their own section design and verified load/span performance.

Explore sizes and prepare an enquiry online

youli-electric-global.vercel.app/cable-trays/wire-mesh-tray/

WIDTH x SIDE HEIGHT x LENGTH / mm

Wire Mesh Cable Tray

Each width below uses a 2000 mm section length and nominal heights of 50, 100, 150 or 200 mm. Confirm the offered drawing, thickness and material.

WIDTH	LENGTH	NOMINAL SIDE HEIGHT OPTIONS	THICKNESS*
50	2000	50 / 100 / 150 / 200	Confirm
100	2000	50 / 100 / 150 / 200	Confirm
150	2000	50 / 100 / 150 / 200	Confirm
200	2000	50 / 100 / 150 / 200	Confirm
300	2000	50 / 100 / 150 / 200	Confirm
400	2000	50 / 100 / 150 / 200	Confirm
450	2000	50 / 100 / 150 / 200	Confirm
500	2000	50 / 100 / 150 / 200	Confirm
600	2000	50 / 100 / 150 / 200	Confirm

1. Nominal enquiry dimensions; supplied geometry, usable space, joint overlap and load/span to confirm.

* Sheet thickness, or wire diameter for mesh; nominal/minimum to confirm. Section length is not the permitted support span.

STRUCTURAL FAMILY / 36 SIZE REFERENCES

Metal Cable Trunking

Compact metal cable routing with a matching removable lid. Select the profile and usable space for the installation.



Illustrative family image. Covers, couplers and supports are selected separately.

CONFIGURATION & PROJECT REVIEW

Select a nominal side height of 50, 100, 150 or 200 mm. Confirm the complete profile, lid, usable internal space and external dimensions. A lid alone does not establish an IP rating.

Request material, finish, nominal/minimum thickness, cover, cable load and support spacing. Alternate materials need their own section design and verified load/span performance.

Explore sizes and prepare an enquiry online

youli-electric-global.vercel.app/cable-trays/cable-trunking/

WIDTH x SIDE HEIGHT x LENGTH / mm

Metal Cable Trunking

Each width below uses a 2000 mm section length and nominal heights of 50, 100, 150 or 200 mm. Confirm the offered drawing, thickness and material.

WIDTH	LENGTH	NOMINAL SIDE HEIGHT OPTIONS	THICKNESS*
20	2000	50 / 100 / 150 / 200	Confirm
30	2000	50 / 100 / 150 / 200	Confirm
40	2000	50 / 100 / 150 / 200	Confirm
50	2000	50 / 100 / 150 / 200	Confirm
60	2000	50 / 100 / 150 / 200	Confirm
80	2000	50 / 100 / 150 / 200	Confirm
100	2000	50 / 100 / 150 / 200	Confirm
150	2000	50 / 100 / 150 / 200	Confirm
200	2000	50 / 100 / 150 / 200	Confirm

1. Nominal enquiry dimensions; supplied geometry, usable space, joint overlap and load/span to confirm.

* Sheet thickness, or wire diameter for mesh; nominal/minimum to confirm. Section length is not the permitted support span.

COMPLETE THE ROUTE

Every turn. Every support.

01 **Straight coupler / splice plate**
Match side-rail profile and bolt pattern.

02 **Horizontal bend**
Specify angle and inside bend radius.

03 **Vertical inside bend**
Specify orientation, angle and radius.

04 **Vertical outside bend**
Specify orientation, angle and radius.

05 **Horizontal tee**
Specify each branch width and height.

06 **Horizontal cross**
Specify all branch dimensions.

07 **Straight / left / right reducer**
Specify inlet/outlet width, height and offset.

08 **Adjustable joint**
Specify horizontal or vertical adjustment.

Match every fitting to the tray profile, width, side height, material and finish. State angle, inside radius, reducer offsets and quantities in pieces. Send the route drawing for coordination.

COMPLETE THE ROUTE

Every turn. Every support.

09 **Expansion joint**
Specify expansion requirement and bonding arrangement.

10 **Cover and cover fasteners**
Specify shape, retention and outdoor uplift needs.

11 **Divider / barrier strip**
Specify separation height and fixing method.

12 **End cap / end plate**
Match tray/trunking profile.

13 **Cable exit and edge protection**
Match cable bend and edge geometry.

14 **Wall bracket / trapeze / hanger**
Support, anchors and substrate require design verification.

15 **Hold-down clamp / guide**
Choose fixed or sliding supports as designed.

16 **Bonding link / earth terminal**
Verify electrical continuity of the complete route.

Match every fitting to the tray profile, width, side height, material and finish. State angle, inside radius, reducer offsets and quantities in pieces. Send the route drawing for coordination.

BUILD A COMPLETE SPECIFICATION

The details behind a dependable route.

01 / Dimensions & quantity

State structure, width, side height, section length, nominal/minimum thickness or wire diameter, usable cable space, quantity and unit. Covers and fittings are separate selections.

02 / Material & finish

Specify carbon steel grade, stainless grade or aluminium alloy. Pre-galvanized sheet, electrogalvanizing and hot-dip galvanizing after fabrication are distinct. Define coating, preparation, thickness and color.

03 / Load, support & environment

Provide cable weight per metre, support spacing, point loads, deflection limit, corrosion exposure and installation orientation. Long-span, heavy-duty and FRP alternatives require configuration-specific design review.

04 / Performance & documentation

IEC 61537 addresses cable tray/ladder systems; IEC 61084 addresses trunking/ducting. Applicable reports must cover the offered system. Fire performance requires evidence for the complete cable/support/fixing arrangement.

05 / Route & compatibility

Include cable bend radii, future capacity, segregation, expansion, bonding, anchor design and building interfaces. A lid alone does not establish an IP rating. Trays are not personnel walkways.

JIANGSU YOULI ELECTRIC CO., LTD.

Share the route.
Let’s work out the details.

Email

cpj17368755577@gmail.com

WhatsApp

+86 173 6875 5577 PRIMARY WHATSAPP

+86 137 7531 6131 ALTERNATE WHATSAPP

Yangzhong, Jiangsu, China

Select dimensions and prepare your project enquiry

youli-electric-global.vercel.app/cable-trays/

November 2026. This guide presents nominal enquiry dimensions with height options selected for this catalogue. It does not represent complete industry coverage, confirmed inventory or transferred certification. Final supplied dimensions, materials, finishes and performance are confirmed at quotation.