YOULI ELECTRIC

2026 / ENGLISH

BUSWAY SYSTEMS / 02

Every route.
One connection.

YLMC busway systems and installation components

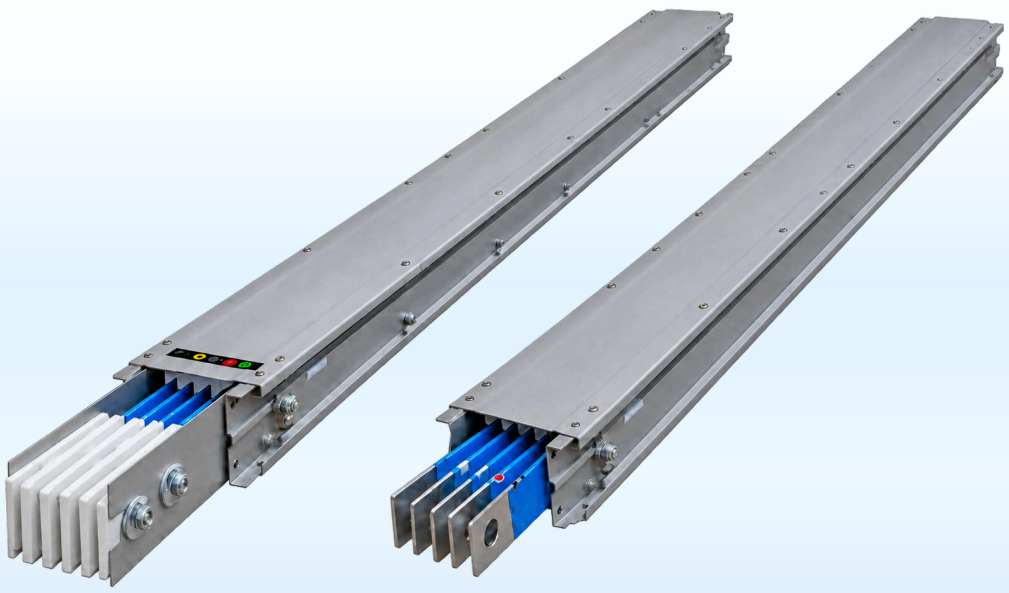

YLMC / AIR-INSULATED BUSWAY

6 systems

BUSWAY FAMILIES

Technical product catalogue

Configured for your project

JIANGSU YOULI ELECTRIC CO., LTD.

Yangzhong, Jiangsu, China

youli-electric-global.vercel.app

Enhanced catalogue photographs. Confirm product details against approved drawings.

YLMC BUSWAY CATALOGUE

Contents

01 Company Profile 03
公司简介

02 Production & Testing 04
生产与检测

03 Functional Units 05
功能单元

04 Structural Features 06
结构特性

05 Enclosure & Insulation 07
外壳与绝缘

06 Connector & Conductors 08
连接器与导体

07 Component Overview 09
组件总览

08 Air-Insulated Busway 10
空气绝缘母线槽

09 Isolated-Phase Busway 11
共箱封闭母线槽

10 Fire-Resistant Busway 12
耐火母线槽

11 Waterproof & Lighting Busway 13
防水与照明母线槽



ABOUT YOULI ELECTRIC

Company Profile

Jiangsu Youli Electric Co., Ltd., established in September 2017 in Yangzhong, Jiangsu Province, China, is a high-tech enterprise specializing in building electromechanical seismic protection systems and power transmission and distribution equipment. The company integrates R&D, manufacturing, sales, and technical services.

Its main products include busway systems and high- and low-voltage switchgear, widely used in commercial complexes, industrial facilities, rail transit, new energy projects, and municipal infrastructure. The company provides professional product support, technical services, and customized solutions.

Equipped with modern manufacturing and testing facilities, the company maintains management systems for quality, environmental protection, and occupational health and safety, and has received recognitions including High-Tech Enterprise status and Jiangsu Famous Brand Product honors.

Guided by the philosophy of “Professionalism, Innovation, and Dedication,” Youli Electric is committed to delivering safe, reliable, and efficient electrical equipment and electromechanical support solutions for engineering projects.

AT A GLANCE

Established	**September 2017**
Location	**Yangzhong, Jiangsu**
Core products	**Busway · switchgear**
Systems	**ISO 9001 / 14001 / 45001**
Recognitions	**High-Tech Enterprise**
Markets	**Commercial · transit · energy**

2017
ESTABLISHED

6 300 A
MAX RATED CURRENT

IP68
HIGHEST PROTECTION

100%
ROUTINE INSPECTED

PROFESSIONALISM · INNOVATION · DEDICATION

Safe, reliable and efficient electrical equipment and electromechanical support solutions for engineering projects worldwide.

MANUFACTURING

Production Equipment



The busway is integrally assembled using a German BOLLHOFF automated riveting and assembly line, ensuring stable and consistent manufacturing quality. This process significantly enhances overall structural strength and electrical continuity. Its highly efficient, continuous production capability also ensures reliable delivery lead times.

Automated Testing System



We strictly adhere to a zero-tolerance policy for quality defects throughout busway manufacturing. Advanced automated testing equipment ensures 100% inspection of every busway unit before delivery. Testing covers critical parameters affecting product performance — insulation resistance, power-frequency withstand voltage and grounding resistance — ensuring product safety, reliability and consistent quality.

VERIFIED ON EVERY UNIT

- Insulation resistance
- Withstand voltage
- Grounding continuity
- Temperature rise

SYSTEM COMPONENTS

Functional Units

01 Straight Busway

02 Horizontal Elbow

03 Vertical Elbow

04 Horizontal Z-Offset Elbow

05 Vertical Z-Offset Elbow

06 Horizontal-to-Vertical Elbow

07 Horizontal Tee

08 Vertical Tee

09 Plug-in Box

10 Busway Joint Connector

11 Reducer Section

12 Protected Reducer Section

13 End Cap

14 Expansion Joint

15 Horizontal Hanger

16 End Feed Box + End Feed Busway + Copper Connecting Bars

17 End Feed Box + End Feed Busway + Flexible Connectors

18 Spring Support

19 Intermediate Fixed Support

20 Cable Incoming Box

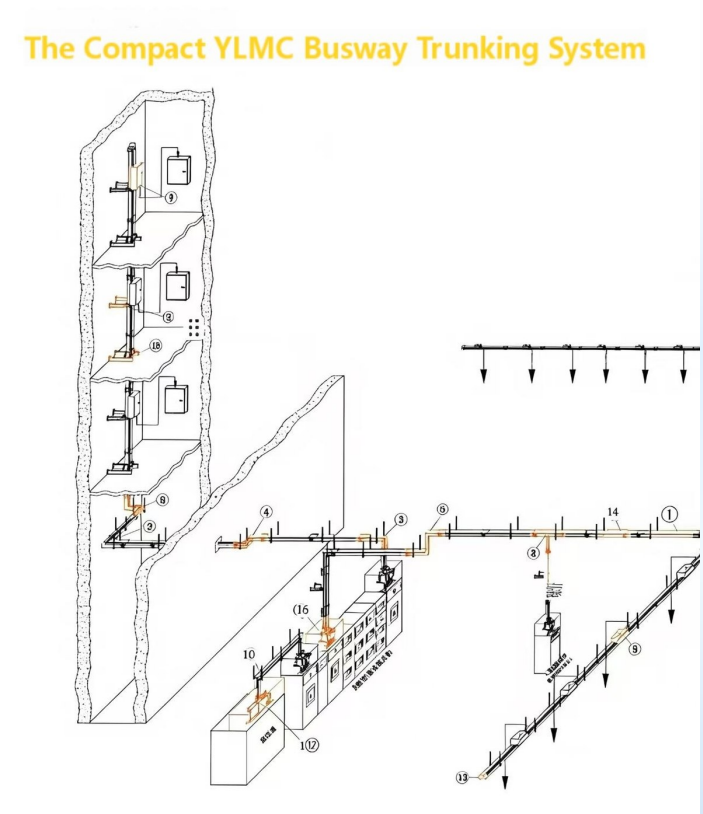

YLMC COMPACT BUSWAY

Structural Features

1. Fully enclosed structure along the entire length.
2. Low impedance and minimal power transmission losses.
3. Compact design that minimizes building space requirements.
4. Excellent heat dissipation, low temperature rise, and long service life.
5. Conduction-based heat dissipation ensures current-carrying capacity is independent of installation orientation.
6. No hollow internal structure, eliminating the chimney effect.
7. Mis-phasing prevention features at both joints and plug-in outlets.
8. Ensures correct phase sequence during installation.
9. Fully automated riveting process.
10. High production efficiency and short lead times.
11. Stable manufacturing processes and consistent product quality.
12. Improved electrical continuity of the enclosure.
13. Various directional units available.
14. Flexible routing to accommodate diverse on-site installation conditions.

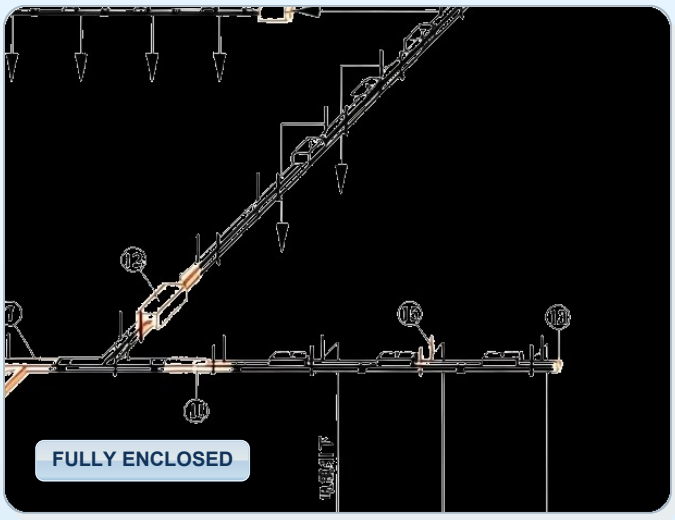

KEY SPECIFICATIONS

1000 V | 400–6300 A | Plug-in 16–1250 A | IP66 | GB/T 7251 · IEC 61439

The YLMC Compact Busway System integrates advanced international technologies with practical power distribution requirements. Suitable for three-phase three-wire, four-wire and five-wire systems, it is widely used in large commercial complexes, high-rise buildings, stadiums, industrial facilities and hospitals.

MATERIALS & CONSTRUCTION

Enclosure & Insulation

1. Enclosure made from aluminum-magnesium alloy profiles formed by a single extrusion process.
2. High mechanical strength and excellent electrodynamic withstand capability.
3. Lightweight design for easy installation.
4. Excellent thermal conductivity — heat dissipation three times that of steel enclosures.
5. Non-magnetic material that minimizes eddy-current and hysteresis losses.
6. Excellent corrosion resistance, even if the surface coating is damaged.

INSULATION — CLASS B POLYESTER FILM

High-quality polyester film with double-layer wrapping provides up to six layers of insulation between phases. Rated Class B for thermal resistance, with a dielectric withstand voltage exceeding 10,000 V per layer. Recommended by the IEC, the material is non-toxic and releases no harmful substances under high temperature.

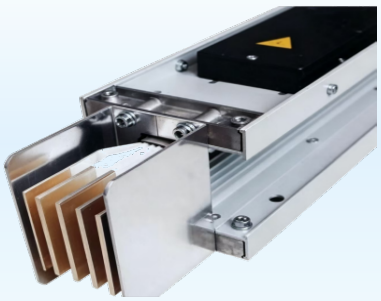

ENCLOSURE



ALLOY PROFILE

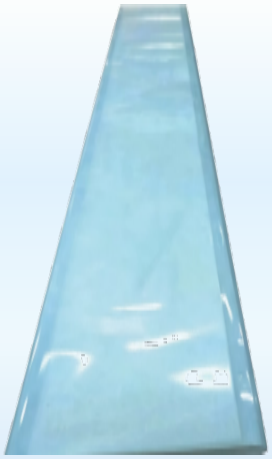

INSULATION

MATERIALS

Aluminium-magnesium alloy enclosure · Extruded in one piece · Polyester film insulation · Class B thermal rating · Dielectric withstand > 10 000 V per layer

ELECTRICAL CONTINUITY

Connector & Conductors

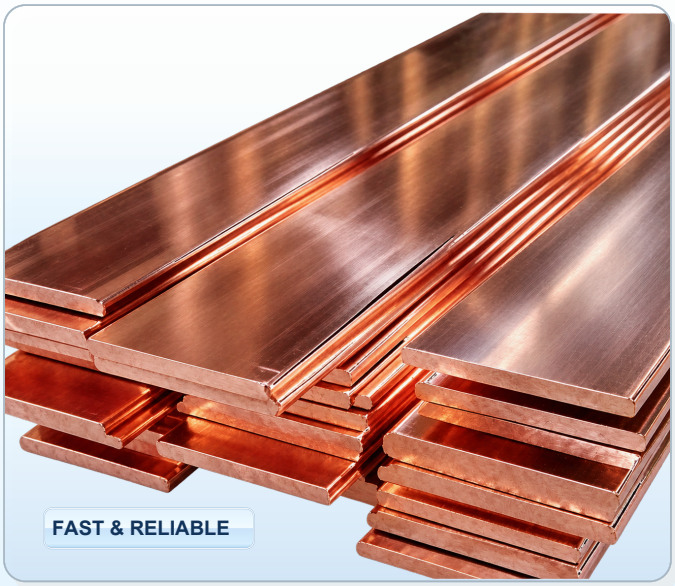

Connector — Fast and Reliable

1. Double-headed torque-memory bolts for quick, secure installation — only a standard 19 mm wrench is required.
2. Butterfly spring washers ensure uniform, sustained contact pressure.
3. Internal conductor cross-section at least 1.2× that of the busway conductors, with double-sided lap joints to reduce contact resistance and improve conductivity.

Conductors — Copper or Alloy Busbars

Copper: high-purity copper conductors manufactured from imported electrolytic copper (purity > 99.95%). Full-length tin or silver plating available on request.

Alloy: high-purity electrical-grade aluminum bars with special surface treatment for enhanced conductivity — performance conventional aluminum bars cannot match.

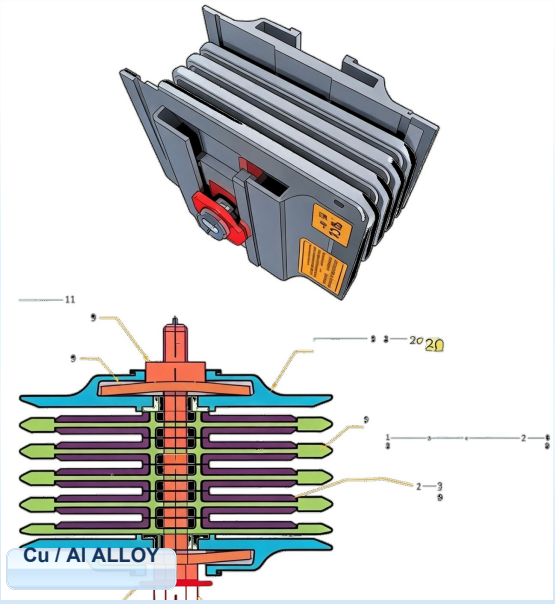

01
Torque-memory bolts

Set torque with a 19 mm wrench; bolts cannot be over- or under-tightened.

02
Butterfly spring washers

Maintain uniform, sustained contact pressure through thermal cycling.

03
Double-sided lap joint

1.2× conductor section reduces contact resistance and hot spots.

COMPONENT OVERVIEW

Busway System Components

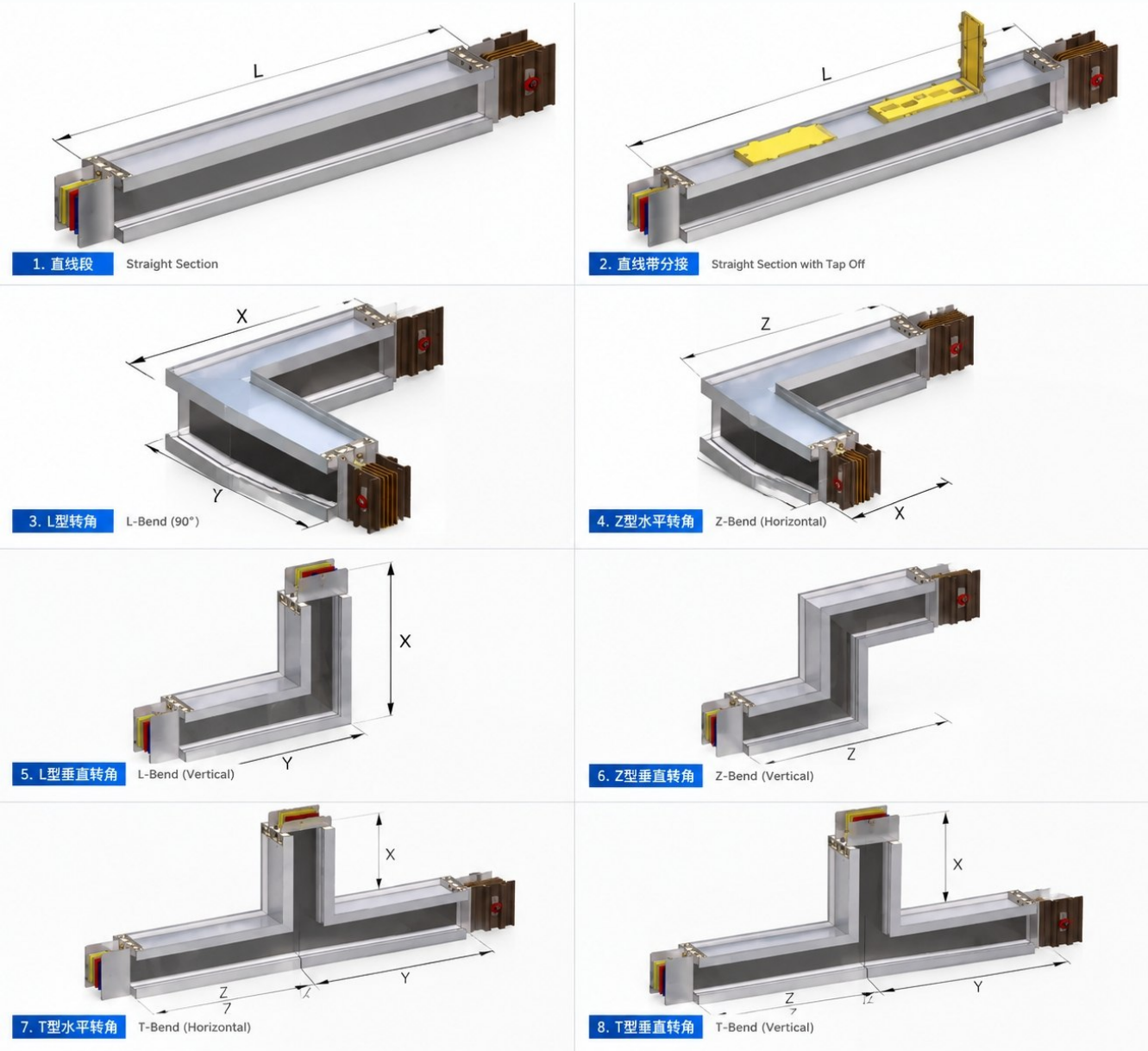

The YLMC busway system comprises a complete range of directional and functional units — straight sections, elbows, tees, plug-in boxes, joint connectors, reducers, end caps, expansion joints, hangers and feed boxes — enabling flexible routing to accommodate diverse on-site installation conditions.

AIR-INSULATED BUSWAY

Air-Insulated Busway

660 V | 250–5000 A | 50/60 Hz | 3P+N / 3P+N+PE



AIR-INSULATED

KEY DATA

Rated voltage	660 V
Rated current	250–5 000 A
Frequency	50 / 60 Hz
System	3P+N / 3P+N+PE
Protection	IP54 · IP65 · IP66

The YLMC Series — reliable low-voltage distribution

The YLMC Series Busway is designed for AC three-phase, four-wire and five-wire power distribution systems operating at 50–60 Hz, with rated voltages up to 660 V and rated currents from 250 A to 5,000 A.

It provides reliable power distribution between low-voltage panels and medium-to-large loads, and for high-current transmission between transformers and low-voltage panels. Typical applications include industrial workshops, automotive plants, motor and welding lines, electric furnaces, factory buildings and high-rise buildings.

The YLMC Series is ideal for long-span installations — easy installation, safe and reliable structure, flexible routing and excellent interchangeability.

Flexible Routing

Elbows, tees, reducers and offsets cover every on-site direction change.

Long Spans

High mechanical stiffness supports long unsupported runs with fewer hangers.

Plug-in Ready

Tap-off boxes 16–1250 A can be added anywhere along the run.

TYPICAL APPLICATIONS

Industrial workshops · Automotive plants · Welding lines · Electric furnaces · Factory buildings · High-rise buildings

ISOLATED-PHASE BUSWAY

Common-Enclosure Isolated-Phase Busway

35 kV | up to 6300 A | Al / Low-magnetic steel



ISOLATED-PHASE

KEY DATA

Rated voltage	up to 35 kV
Rated current	up to 6 300 A
Enclosure	Al alloy / low-magnetic steel
Conductor	Cu or Al, rectangular
Grounding	Multi-point, continuous

The ideal choice for high-voltage, high-current applications

The three-phase common-enclosure busway features an enclosure of aluminum alloy or low-magnetic steel (stainless steel), with rectangular or channel-shaped copper or aluminum busbars as conductors.

Rated current up to 6,300 A and rated operating voltage up to 35 kV. Widely used for power transmission between generators and transformers, or between transformers and high-voltage switchgear; also suitable for AC/DC generator excitation circuits and auxiliary power in substations.

Safe and reliable: conductors supported by high-strength insulators with long creepage distances; optimized insulator spacing prevents resonance; fully continuous enclosure with multi-point grounding reduces electric-shock risk. Joint surfaces are tin- or silver-plated to reduce contact resistance and temperature rise.

High Current

Up to 6300 A in a single common enclosure for generator and transformer links.

Insulator Support

High-strength insulators with long creepage for short-circuit withstand.

Low Loss

Non-magnetic enclosure minimises eddy-current heating and temperature rise.

TYPICAL APPLICATIONS

Generators to transformers · Transformers to HV switchgear · Excitation circuits · Substation auxiliary power

FIRE-RESISTANT BUSWAY

Fire-Resistant Busway

Fire-resistant | Heat-insulating | Flame-retardant

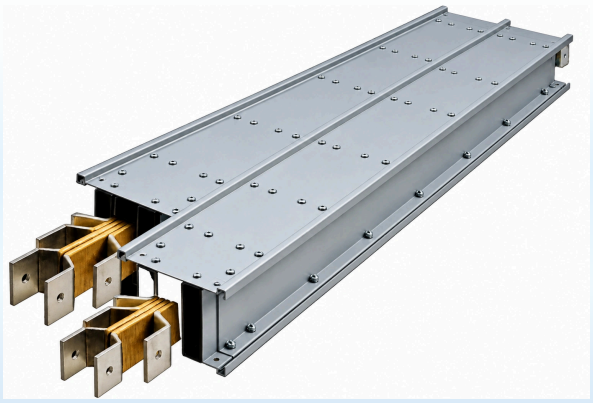

FIRE-RESISTANT

KEY DATA

Integrity period	**per project spec**
Insulation class	**Class H (silver mica / PI)**
Enclosure	**Steel + fire barrier**
Protection	**IP65 (typical)**
Standard	**GB/T 7251.6 · IEC 61439-6**

Sustained power under fire conditions

The fire-resistant busway is independently developed by Youli, combining the structural advantages of compact busway with fire-resistant, heat-insulating and flame-retardant materials. It features a compact structure, space-saving design, excellent high-temperature resistance, superior fire protection and high power transmission capacity.

Primarily designed for underground buildings, critical control centers, subway systems, crowded public spaces and other facilities with stringent fire safety requirements.

In a fire, the system maintains power supply for a specified period, providing time for firefighting equipment, smoke extraction, ventilation and evacuation — minimizing casualties and property damage.

Fire Integrity

Maintains circuit integrity for the specified period during a fire.

Thermal Barrier

Heat-insulating layers limit conductor temperature rise.

Evacuation Time

Supports smoke extraction, ventilation and safe evacuation.

TYPICAL APPLICATIONS

Underground buildings · Control centres · Subway systems · Crowded public spaces

SPECIALIZED SERIES

Waterproof & Lighting Busway

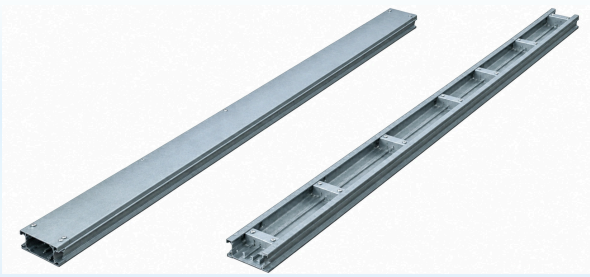

IP68

Fully Enclosed, Waterproof Busway — IP68

The enclosure is integrally cast from unsaturated polyester resin and inorganic materials; light stabilizers and flame retardants enhance aging resistance and flame-retardant performance. Suitable for long-term outdoor use and corrosive-gas environments. Once installed and commissioned, the busway requires no routine maintenance. The copper busbars are wrapped with polyimide insulation film (Class H insulation).

IP68 | Class H insulation | Outdoor / corrosive



LIGHTING RUN

Lighting Busway — 25–125 A, IP54

Specifically designed for lighting power distribution in large open spaces — shopping malls, supermarkets, exhibition halls, railway stations, airports, offices and workshops. Attractive appearance and compact structure; dedicated connectors between sections with evenly distributed plug-in outlets. A full range of accessories supports various lighting fixtures, with current tap-off plug units for reliable connections and quick installation without specialized tools.

TYPICAL APPLICATIONS

Shopping malls · Supermarkets · Exhibition halls · Railway stations · Airports · Office buildings · Industrial workshops

COMPLIANCE

Both systems are designed and type-tested to GB/T 7251.1 and GB/T 7251.6 (IEC 61439-1 / IEC 61439-6). Routinely verified parameters: insulation resistance, power-frequency withstand voltage, grounding continuity and temperature rise. Protection classes IP54, IP65, IP66 and IP68 are available across the range.

YOULI

ELECTRIC

Your next project. Let's connect.

Share your drawings, product list or technical requirements.

EMAIL

cpj17368755577@gmail.com

WHATSAPP

+86 173 6875 5577 PRIMARY WHATSAPP

WHATSAPP

+86 137 7531 6131 ALTERNATE WHATSAPP

WEBSITE

youli-electric-global.vercel.app

JIANGSU YOULI ELECTRIC CO., LTD.

Sanlan Road, Yangzhong, Jiangsu, China

Final specifications and applicable documentation are confirmed with your quotation.