COMPONENT CATALOGUE / ENGLISH

Every connection. Considered.

Busway Accessories

Connection hardware, insulation, seals, supports and functional units.

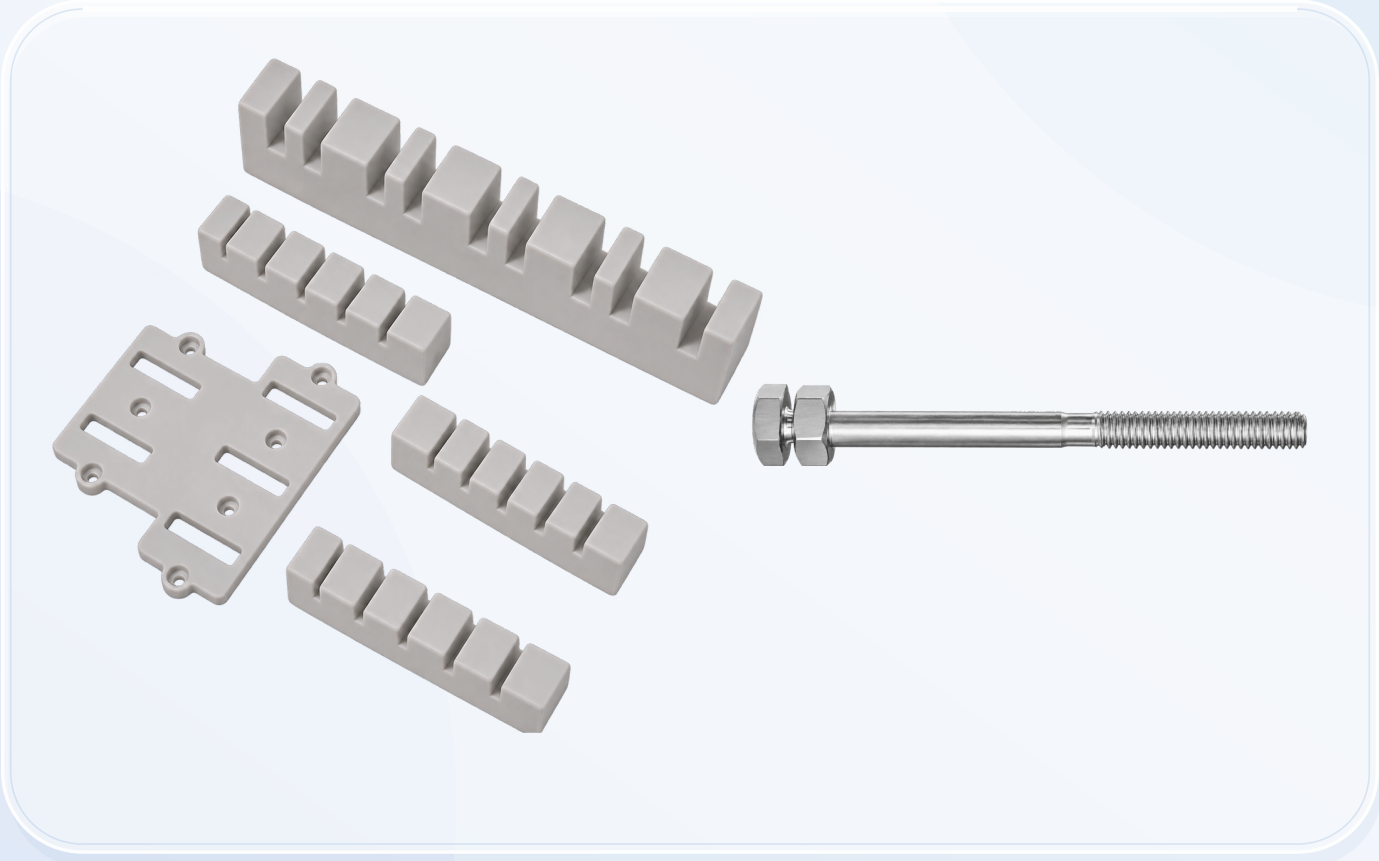

SPECIFY WITH CONFIDENCE

Common options for project enquiries. Final dimensions, materials, ratings and compatibility are confirmed against your drawings and quotation.

A DEDICATED SYSTEM CATALOGUE

Everything around the busway connection.

Accessory overview	3
Connection, insulation, sealing & support	4–11
Functional units 01–10	12
Functional units 11–20	13
Project enquiry	14
Contact YOULI	15

24 accessory families and 20 functional units. Low-voltage panel components are provided in a separate catalogue.

SECTION A / BUSWAY

Complete the connection.

Components for joints, conductor insulation, enclosure sealing and installation support.

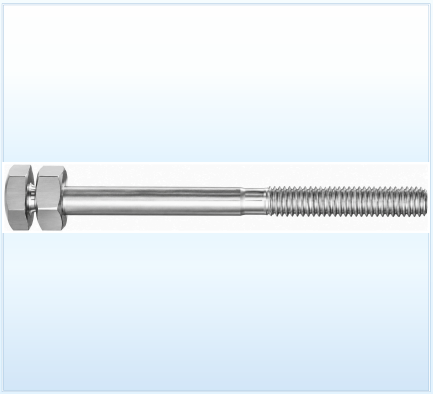

CONNECT

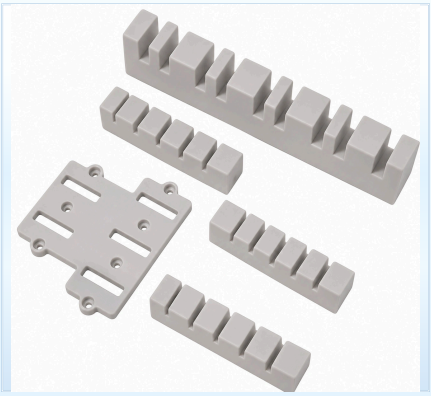

INSULATE

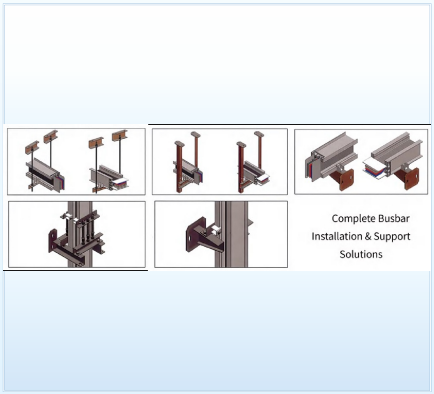

SUPPORT

FUNCTION	REFERENCE COMPONENTS
Connection	Torque bolts, nuts, washers, copper contacts, flexible connections and enclosure hardware
Insulation	PA66 sleeves, BMC/DMC parts, insulation films, tapes and heat-shrink tubing
Sealing	Silicone rings and strips, CR strips and tap-off gaskets
Installation / protection	Supports and hangers, refractory insulation and mica tape

Compatibility is assembly-specific. Match the component to the busway system, conductor arrangement, joint design and installation drawing. Dimensions, materials and applicable ratings are confirmed for the selected configuration.

BUSWAY ACCESSORIES / 01

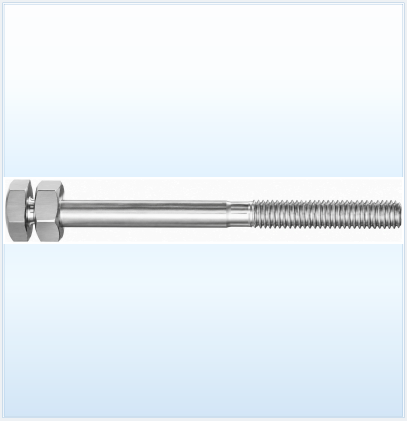

A01 / CONNECTION

Double-ended torque bolts

Quenched-steel joint bolts with coating and controlled-torque options selected to the assembly specification. Confirm the installation requirements for the chosen joint.

REFERENCE OPTIONS

M12 x 105-160 mm (5 mm catalogue increments); other dimensions to drawing.

Confirm dimensions, fit and order specification.

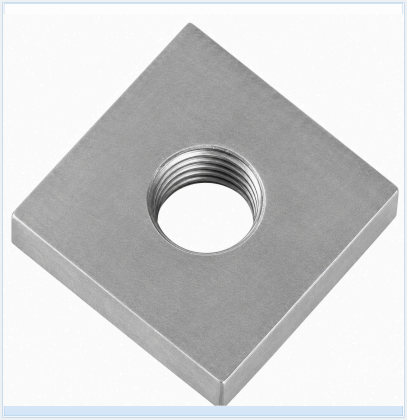

A02 / CONNECTION

Square nuts

35# steel, Dacromet-coated, for busway joint connections.

REFERENCE OPTIONS

M12 / 29 x 29 mm / M12 / 27 x 27 mm

Confirm dimensions, fit and order specification.



A03 / CONNECTION

Bowl washers

Spring-steel washers for joint-pressure assemblies. Material, heat treatment and final dimensions are confirmed to the selected design.

REFERENCE OPTIONS

Reference designation: M75. Confirm the actual dimensions against the drawing.

Confirm dimensions, fit and order specification.

BUSWAY ACCESSORIES / 02



A04 / INSULATION

PA66 insulation sleeves

Flame-retardant PA66 sleeves for insulating and positioning joint bolts.

REFERENCE OPTIONS

M12 x 80 mm / M12 x 90 mm / M12 x 100 mm / M12 x 110 mm / Custom length

Confirm dimensions, fit and order specification.



A05 / INSULATION

Insulating tube covers

M12 insulating covers for busway connection assemblies. Confirm the fit against your drawing.

REFERENCE OPTIONS

M12 / Custom dimensions

Confirm dimensions, fit and order specification.



A06 / INSULATION

BMC / DMC insulation sheets

Phase insulation and structural support. Material grade and thermal rating selected to the project.

REFERENCE OPTIONS

BMC / DMC; dimensions, grade and thermal rating to the project.

Confirm dimensions, fit and order specification.

BUSWAY ACCESSORIES / 03



A07 / CONNECTION

Torque indicator tags

PA66 shear indicators provide visual confirmation during bolt installation.

REFERENCE OPTIONS

M12 / M14

Confirm dimensions, fit and order specification.



A08 / SEALING

Silicone washer seals

Silicone sealing rings protect joint locations against dust and moisture.

REFERENCE OPTIONS

M12 / Custom dimensions

Confirm dimensions, fit and order specification.



A09 / CONNECTION

Aluminium end caps

Die-cast aluminium end caps with project-specific hole spacing and dimensions.

REFERENCE OPTIONS

128 x 30-100 mm / 128 x 52-98 mm / Custom dimensions

Confirm dimensions, fit and order specification.

BUSWAY ACCESSORIES / 04

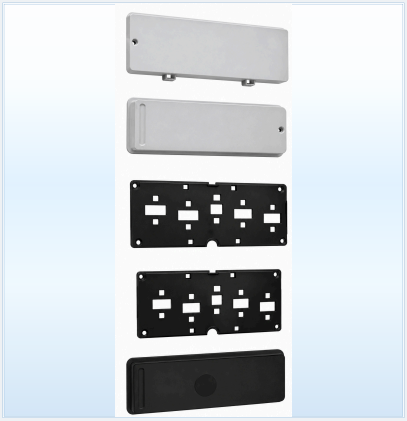

A10 / CONNECTION

Tap-off sockets & plugs

Flame-retardant PA66 connection and positioning parts for tap-off assemblies. Fit confirmed by drawing.

REFERENCE OPTIONS

Compact busway type / Air-insulated busway type / Waterproof busway type / Custom interface

Confirm dimensions, fit and order specification.

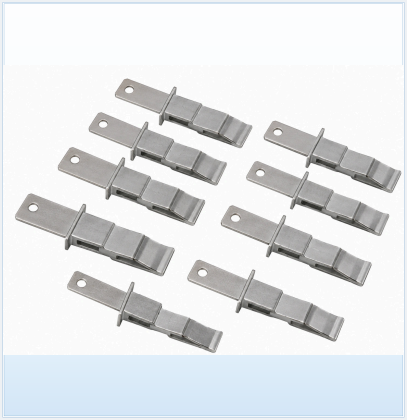

A11 / CONNECTION

T / L copper contact pins

Copper contacts for busway plug-in systems, with T-type and L-type structural options.

REFERENCE OPTIONS

100 A / 125 A / 160 A / 200 A / 250 A / 315 A / 400 A / 500 A / 630 A

Confirm dimensions, fit and order specification.

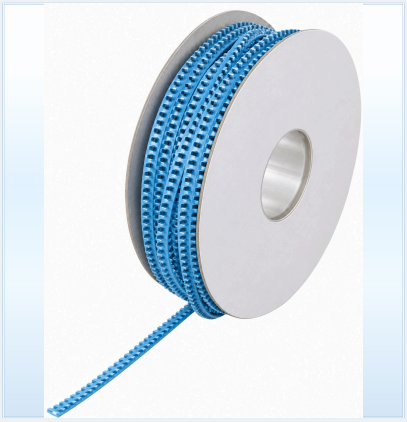

A12 / CONNECTION

Enclosure rivets

Heat-treated manganese-steel rivets for busway enclosure assembly.

REFERENCE OPTIONS

5 x 6 mm / 5 x 7 mm / 5 x 8 mm / 5 x 9 mm

Confirm dimensions, fit and order specification.

BUSWAY ACCESSORIES / 05



A13 / INSULATION

Electrical insulation tape

Flexible PVC insulation tape for wrapping and protecting electrical connections.

REFERENCE OPTIONS

0.06 mm / 0.08 mm / Custom colour / width

Confirm dimensions, fit and order specification.



A14 / SEALING

Silicone sealing strips

Flexible silicone strips for sealing cover and side-plate joints.

REFERENCE OPTIONS

Custom profile / Custom length

Confirm dimensions, fit and order specification.



A15 / CONNECTION

Flexible copper connectors

Laminated or braided copper connections accommodate vibration and installation tolerance.

REFERENCE OPTIONS

Laminated copper / Braided copper / Custom cross-section

Confirm dimensions, fit and order specification.

BUSWAY ACCESSORIES / 06



A16 / SEALING

CR insulation strips

Chloroprene rubber strips for insulation, sealing and vibration damping at tap-off interfaces.

REFERENCE OPTIONS

Custom strip / Custom tap-off gasket

Confirm dimensions, fit and order specification.



A17 / INSULATION

Oriented PTFE film

PTFE film for electrical insulation and conductor protection. Thickness selected to the design.

REFERENCE OPTIONS

Custom thickness / Custom width

Confirm dimensions, fit and order specification.



A18 / INSULATION

Insulators & busbar frames

Insulating supports and conductor frames for busbar assemblies. Electrical duty, material and dimensions are selected to the project.

REFERENCE OPTIONS

Insulators / Busbar frames / Custom drawing

Confirm dimensions, fit and order specification.

BUSWAY ACCESSORIES / 07



A19 / INSULATION

Heat-shrink tubing

Polymer tubing for conductor insulation and environmental protection. Select the voltage class and size.

REFERENCE OPTIONS

Low voltage / Medium voltage / High voltage / Custom diameter

Confirm dimensions, fit and order specification.



A20 / INSULATION

PET polyester film

Conductor wrapping film in project-selected thermal and flame-retardant grades.

REFERENCE OPTIONS

6021 / 6023 / JAN-21 / DX10A / DN100 / 6641 / X-1

Confirm dimensions, fit and order specification.

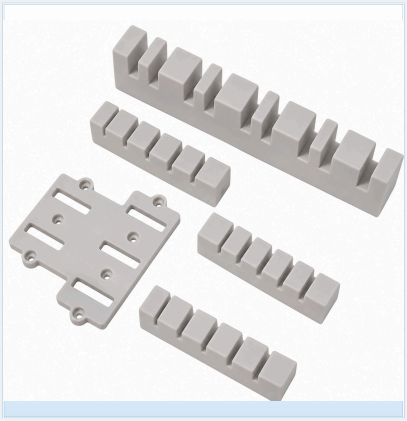

A21 / INSULATION

DMC phase spacers

DMC spacers separate and support phase conductors in air-insulated busway systems.

REFERENCE OPTIONS

Air-insulated busway / Custom drawing

Confirm dimensions, fit and order specification.

BUSWAY ACCESSORIES / 08

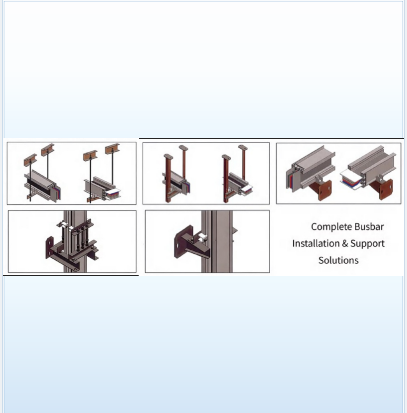

A22 / SUPPORTS

Busway support systems

Supports and hangers for horizontal, vertical and wall-mounted busway installation.

REFERENCE OPTIONS

Horizontal support / Vertical support / Spring hanger / Seismic support / Adjustable hanger / Wall bracket

Confirm dimensions, fit and order specification.



A23 / FIRE PROTECTION

Refractory insulation

Thermal insulation material for busway assemblies. Grade, thickness and fire performance confirmed to specification.

REFERENCE OPTIONS

Custom thickness / Custom dimensions

Confirm dimensions, fit and order specification.



A24 / FIRE PROTECTION

Mica insulation tape

Mica-based insulation and thermal protection for busway conductors and electrical equipment.

REFERENCE OPTIONS

Custom width / Custom thickness

Confirm dimensions, fit and order specification.

SYSTEM COORDINATION / FUNCTIONAL UNITS

Routing, feeding & support. Selection 01-10

REF.	FUNCTIONAL UNIT	INFORMATION TO CONFIRM
U01	Straight busway	Length, conductor arrangement and rating to drawing.
U02	Horizontal elbow	Route angle, centre-line position and orientation.
U03	Vertical elbow	Vertical transition and conductor orientation.
U04	Horizontal Z-offset elbow	Horizontal offset and overall dimensions.
U05	Vertical Z-offset elbow	Vertical offset and clearance envelope.
U06	Horizontal-to-vertical elbow	Transition plane and interface arrangement.
U07	Horizontal tee	Branch direction and connection geometry.
U08	Vertical tee	Vertical branch orientation and dimensions.
U09	Plug-in box	Tap-off interface, device duty and enclosure requirements.
U10	Busway joint connector	Joint design, phase arrangement and connection interface.

Functional units are selected as part of a complete busway design. Geometry, electrical ratings, enclosure protection and interfaces are confirmed by the engineering drawing and quotation. This table is not an installation instruction.

SYSTEM COORDINATION / FUNCTIONAL UNITS

Routing, feeding & support. Selection 11-20

REF.	FUNCTIONAL UNIT	INFORMATION TO CONFIRM
U11	Reducer section	Incoming / outgoing ratings and transition dimensions.
U12	Protected reducer section	Protection arrangement and reducer configuration.
U13	End cap	System profile and terminal-end dimensions.
U14	Expansion joint	Movement allowance and project-specific connection design.
U15	Horizontal hanger	Load, mounting centres and fixing arrangement.
U16	End feed box + copper bars	Feed connection and copper-bar dimensions.
U17	End feed box + flexible connectors	Feed connection and flexible-connector arrangement.
U18	Spring support	Vertical load, movement and support requirement.
U19	Intermediate fixed support	Fixing point, loading and support dimensions.
U20	Cable incoming box	Cable entry, termination interface and enclosure requirement.

Functional units are selected as part of a complete busway design. Geometry, electrical ratings, enclosure protection and interfaces are confirmed by the engineering drawing and quotation. This table is not an installation instruction.

MAKE YOUR ENQUIRY SPECIFIC

Your requirements. Our next conversation.

Send the selected references and drawings to our team. We will confirm the offered model, technical details and commercial terms.

Product and reference

Family, selected reference, quantity and unit.

Technical requirements

Dimensions, materials, electrical duty, mounting and environment.

Drawings and compatibility

Assembly / wiring drawings, interfaces and the matching device or system.

Delivery requirements

Destination, packaging, required date and requested documentation.

Use the website to create an enquiry list, then prepare an email or WhatsApp message. Add drawings before sending.

JIANGSU YOULI ELECTRIC CO., LTD.

Let’s build the right connection.

Email

cpj17368755577@gmail.com

WhatsApp

+86 173 6875 5577 PRIMARY WHATSAPP

+86 137 7531 6131 ALTERNATE WHATSAPP

Yangzhong, Jiangsu, China

Product selections, catalogues and project enquiries

youli-electric-global.vercel.app

Edition: November 2026. Selection information is provided for enquiries. Final models, dimensions, material grades, electrical ratings, availability and applicable documentation are confirmed for the quoted configuration.